FILTER CARD ASSEMBLY

321268

PARTS REQ.	NO. REQ.	USED ON	NO. REQ.
		321241	1
		321265	1

ALL DIMENSIONS ± UNLESS OTHERWISE SPECIFIED.

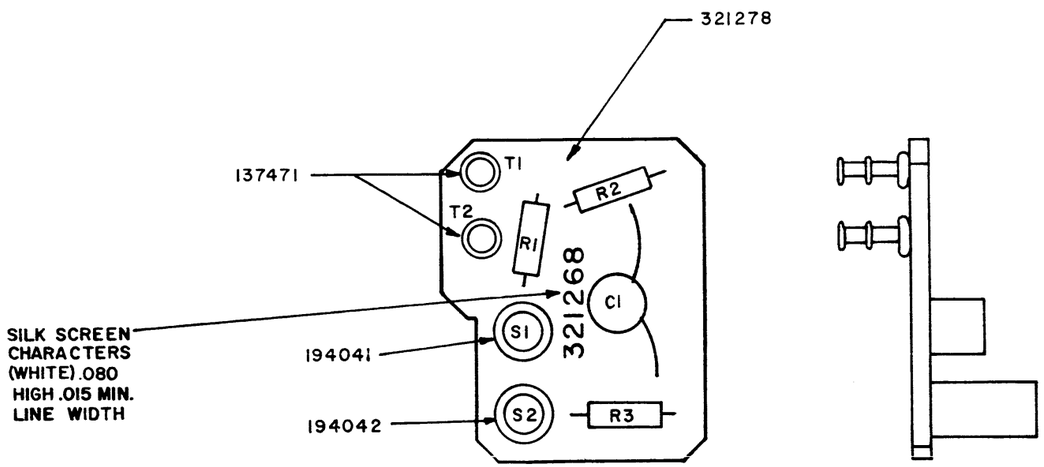

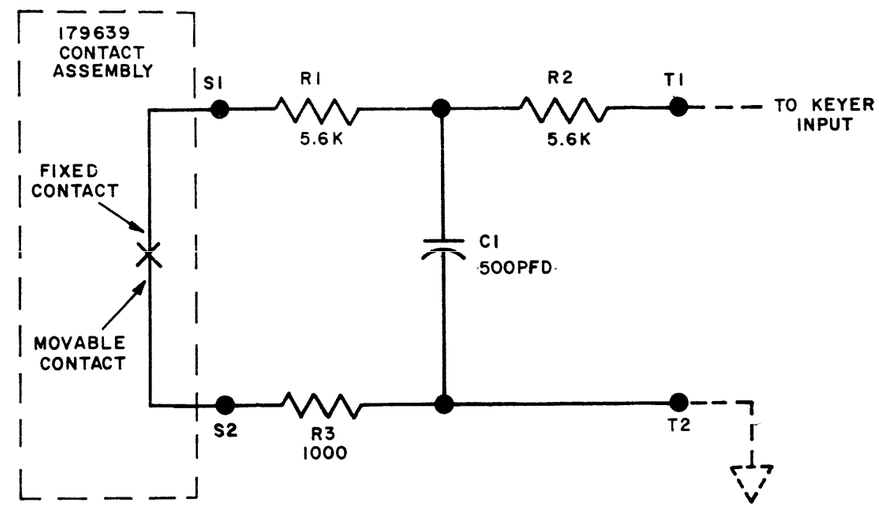

NOTE:

DASHED LINES INDICATE EXTERNAL CIRCUITRY.

REF. DESIGN	TELETYPE PART NO.	TOTAL QTY.	NAME AND DESCRIPTION	LOCATING FUNCTION
R1	315960	2	RESISTOR, 5.6K 1/4 WATT	RC FILTER
R2	"		SAME AS R1	"
R3	321213	1	RESISTOR, 1000 Ω 1/4 WATT	"
C1	321157	1	CAPACITOR, 500 PFD	"
T1	137471	2	TERMINAL, SOLDER	
T2	"		"	
S1	194041	1	STUD, CONNECTOR	
S2	194042	1	"	
321278	321278	1	BOARD, ETCHED CIRCUIT	

REVISIONS

ISSUE NO.	DATE	AUTHOR NO.
1	9-13-66	17939-R
2	6-16-67	94065

WDP

APPROVALS

D AND R	E OF M
HAR	C1

E. NUMBER

PROD. NO. 321268

SCALE: 2/1

STOCK SPECIFICATION

SIZE	KIND	SHAPE	TEMPER

DRAWN	PD FILE NO	DATE
R.S.S.	15-65AAA	6-13-66

DESIGNED	ENGINEER	CHECKED	APPROVED
	R.J.M.		

TELETYPE CORPORATION

321268

ET108144 TC257(6-54)