ISSUE 3 - Supersedes all issues of 1090B and all previous issues of 1067B.
October, 1960

BULLETIN 1067B

PARTS
MODEL 15
PERFORATOR TRANSMITTER
(PEX)

TELETYPE®
CORPORATION
SUBSIDIARY OF *Western Electric Company* INC.
SKOKIE, ILLINOIS, U. S. A.

© 1933, 1941 and 1942 by Teletype Corporation.
All rights reserved.

Printed in U.S.A.

ALPHABETICAL INDEX

	Page
Break Key	1
Cables	30
Cable Clamps	1, 3, 4, 13, 15, 20
Cam Pulsing Contacts Assem.	8
Cam Sleeve - Transmitter Shaft	7
Condenser	4
Connecting Links	5
Contact Mounting Assem.	7
Copyholder Assem.	26, 27, 28
Counter Bracket - For Left-Hand Mounting	20
Counter Casting - For Right-Hand Mounting	20
Counter Control Contacts Assem. - Mounted on Keyboard	9
Counter Control Contacts Assem. - Mounted on Perforator Unit	11
Counter Control Unit	6
Counter Mechanism Assem.	19, 24
Cover - Counter Mechanism	20
Cover - Perforator Unit	23
Cover - Perforator and Counter Unit	23, 24
Cover - Printer	21, 22, 24
Filter Unit Assem.	10
Form Accumulating Shelf Assem.	22
Gears	7
Indicator - Counter	20
Keyboard	1, 3, 4
Key Levers	1
Keytops	29
Lamp - Counter	20
Line Test Key	1, 2
Link Extensions	12, 14
Metal Tearing Edge Parts	22
Magnets	12, 19
Name Plates	1, 22, 24, 28
Numerical Index	40
Perforator Control Contacts Assem.	9
Positive Action Perforating Parts	16
Punch Block Assem.	17

	Page
Punch Contacts Assem.	11, 13, 15
Punch Contact and Latch Assem.	16
Punch Unit Parts	11, 12, 13, 14, 15, 16
Resistor and Guard - For 220 Volt Operation	18
Resistor - Flat Type	3
Resistor - Round Type	4, 6, 9, 18
Selector Bars	5
Selector Fingers	12, 14
Selector Levers	12, 14
Sets of Keytops	29, 33
Sets of Parts (Modification Kits)	31
Set of Parts for Converting Bell System Keytop Arrangement "C" to "A" (for use on 15-A Perforator Transmitter)	31
Set of Parts for Converting Bell System Keytop Arrangement "C" to "B" (for use on 15-B Perforator Transmitter)	31
Set of Parts for Converting Bell System Keytop Arrangement "C" to "A" (for use on 15-D Perforator Transmitter)	33
Set of Parts for Converting Bell System Keytop Arrangement "C" to "B" (for use on 15-E Perforator Transmitter)	33
Set of Parts to Apply Adjustable Feed Punch Selector Lever and Selector Lever Guide	33
Set of Parts to Apply Improved Counter Control Mechanism	31
Set of Parts to Apply Long Spacer Bar to Perforator Transmitters Equipped with Space Mechanism Having Centrally Located Space Key Lever	33
Set of Parts to Apply Lower Punch Operating Contacts and Adjustable Key Pressure Mechanism	32
Set of Parts to Apply Space Mechanism with Centrally Located Space Key Lever	32
Set of Parts to Apply Two-Piece Armature Lever and Follow-Through Feature.	32
Set of Parts to Convert a Type PEX 14 Perforator Transmitter to a Type PEX 20	35
Set of Parts to Equip a Model 15 Perforator Transmitter for Blinding Selector Magnets	39
Set of Parts to Equip a Model 19 Set with Fan Fold Tape Container	39
Set of Parts to Equip a Perforator Transmitter With Positive Action Perforating Feature	37
Set of Parts to Hold Universal Bar Depressed	31
Set of Parts to Provide a Cam Pulsing Contact Assembly on Perforator Transmitter Keyboards for 100 W.P.M. Operation	38
Set of Parts to Provide a Repeat-Character Feature for the Model 15 Perforator Transmitter	38
Set of Parts to Provide Cover Locating Stud and Terminal Block Guard	16
Set of Parts to Provide Improved Operating Margins for the Punch Unit	34
Set of Parts to Provide Local Test on Keyboard	2
Set of Parts to Provide Operation of Perforator Transmitters at 100 W.P.M. (7.42 Unit Transmission)	38
Set of Parts to Provide Rapid Feed-Out of Tape on Perforator Transmitter	37

	Page
Set of Parts to Reduce Friction of the Repeat Space Rod Cutout	34
Slide Plate	6
Spacer Bars	1, 3
Tape Feed Parts	12, 13, 14, 15
Tape Gauge	18
Tape Reel Bracket	22
Tape Reel Container Assem.	25
Terminal Block Assem.	1, 13
Tool - For Cleaning Punch Block	18
Transmitter Parts	7
Transmitter Shaft	7
Universal Bar	6

BELL SYSTEM TO TELETYPE CODE DESIGNATION CHARTS

PERFORATOR TRANSMITTER UNITS	
BELL SYSTEM CODE	TELETYPE CODE
15G**	PEX201**/JM
15J**	PEX203**/SB
15K**	PEX203**/SA
15L**	PEX203**/CS
15R**	PEX204**/SB
15S**	PEX204**/SA
15T**	PEX204**/CS

COVER	
BELL SYSTEM CODE	TELETYPE CODE
15M**	PEXC205**
15S**	PEXC203** + 115726**
15U**	PEXC200** + 115726**
15N**	PEXC201** + 115726**

COLOR CODE CHART FOR PARTS AND ASSEMBLIES REQUIRING A PAINT FINISH		
BELL SYSTEM CODE	TELETYPE CODE	PAINT FINISH
37	AA	BLACK WRINKLE
40	AB	GRAY GREEN WRINKLE
39	AC	LIGHT BROWN WRINKLE
38	AD	DARK BROWN WRINKLE
SUFFIX TO BE APPLIED FOLLOWING THE PART NUMBER		

BELL SYSTEM ONLY

WHEN ORDERING PARTS FROM THIS BULLETIN, PREFIX EACH NUMBER WITH THE LETTERS TP.

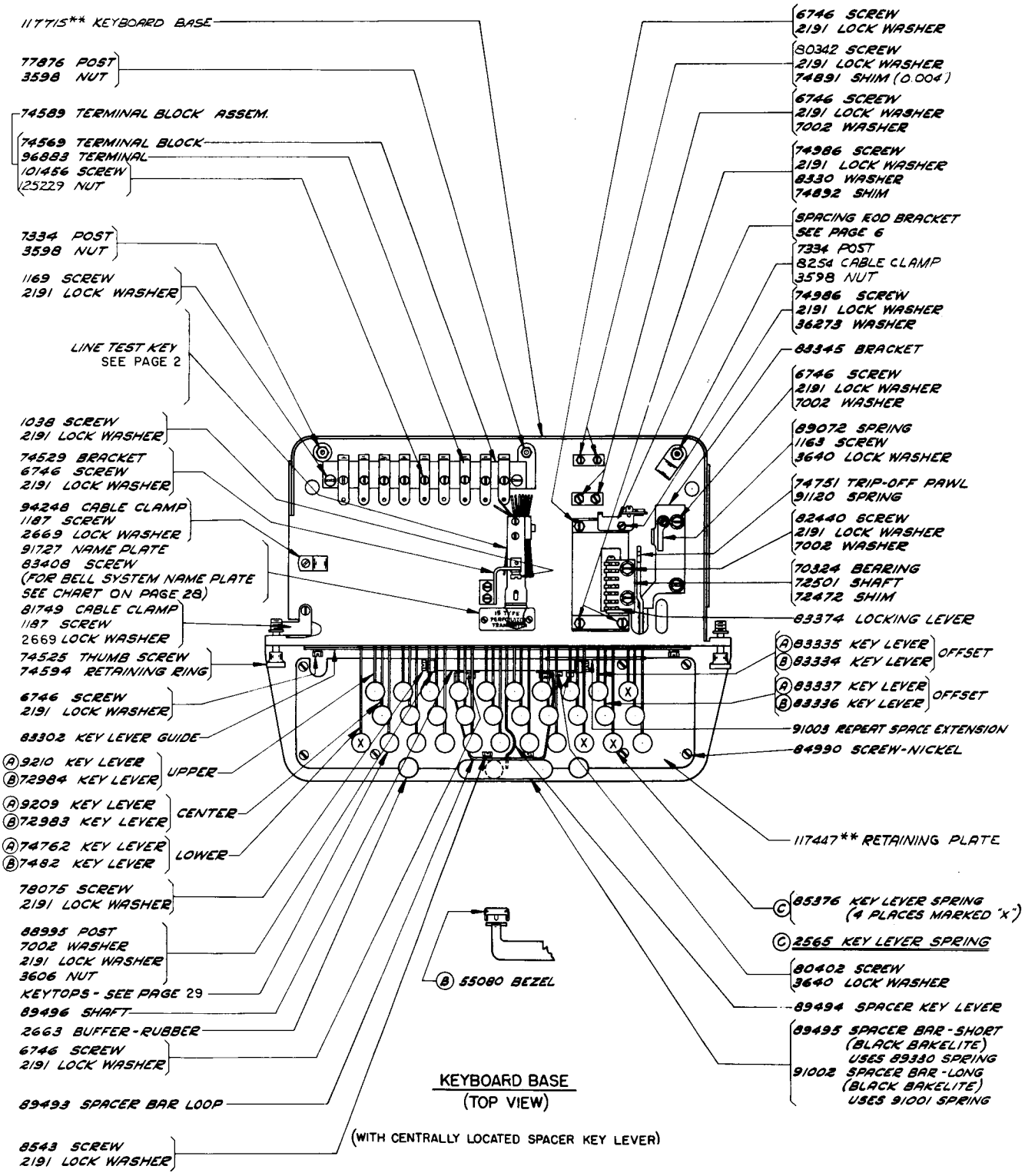

(A) KEYLEVER (WITH DISC) FOR SPRING CUSHION KEYTOPS.

(B) FOR CELLULOID KEYTOPS. WHEN CONVERTING FROM CELLULOID TO SPRING CUSHION KEYTOPS A 72539 KEY LEVER DISC (ONE FOR EACH KEY LEVER) MUST BE ORDERED. THE 72539 DISC IS SECURED IN POSITION ON THE KEY LEVER BY BENDING THE TWO LUGS.

(C) THE 2565 KEY LEVER SPRING IS USED ON ALL KEY LEVERS (EXCEPT SPACER KEY LEVER) WHEN THE UNIT IS EQUIPPED WITH THE PARTS MARKED (A) ON PAGES 5 AND 6.

THE 2565 KEY LEVER SPRINGS IN THE FOUR POSITIONS INDICATED BY AN "X" ARE REPLACED BY 85376 KEY LEVER SPRINGS WHEN THE UNIT IS EQUIPPED WITH THE PARTS MARKED (D) ON PAGE 6.

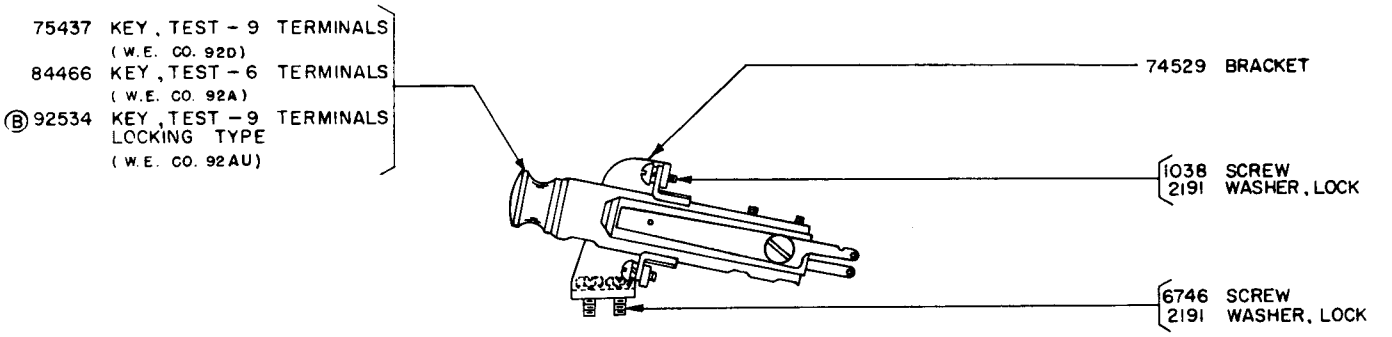

LINE TEST KEY - LOCKING AND NON-LOCKING (PUSH TYPE)

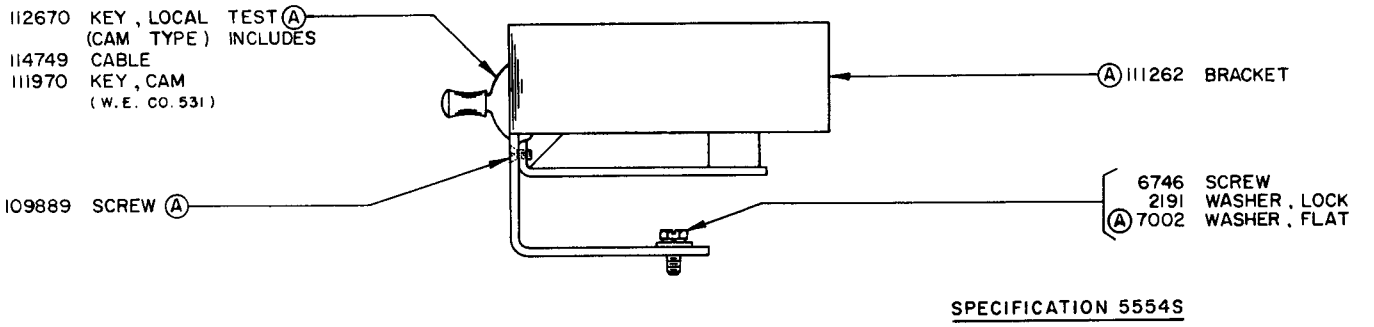

SPECIFICATION 5554S

112549 SET OF PARTS TO PROVIDE LOCAL TEST ON KEYBOARD

(SEE PAGE 6 FOR ADDITIONAL PARTS MARKED (C))

(A) 106938 SET OF PARTS TO CONVERT THE PUSH TYPE TEST KEY TO THE CAM TYPE TEST KEY.

(B) THE 92534 LINE TEST KEY (W.E. CO. 92AU) DIFFERS FROM THE 75437 LINE TEST KEY (W.E. CO. 92D) IN THAT IT IS PROVIDED WITH A PLUNGER OR BUTTON WHICH NORMALLY HOLDS THE CONTACTS LOCKED IN THE "OPERATING" OR "LINE" POSITION. THIS PLUNGER IS INTENDED TO BE RELEASED ONLY BY MAINTENANCE MEN FOR TEST PURPOSES.

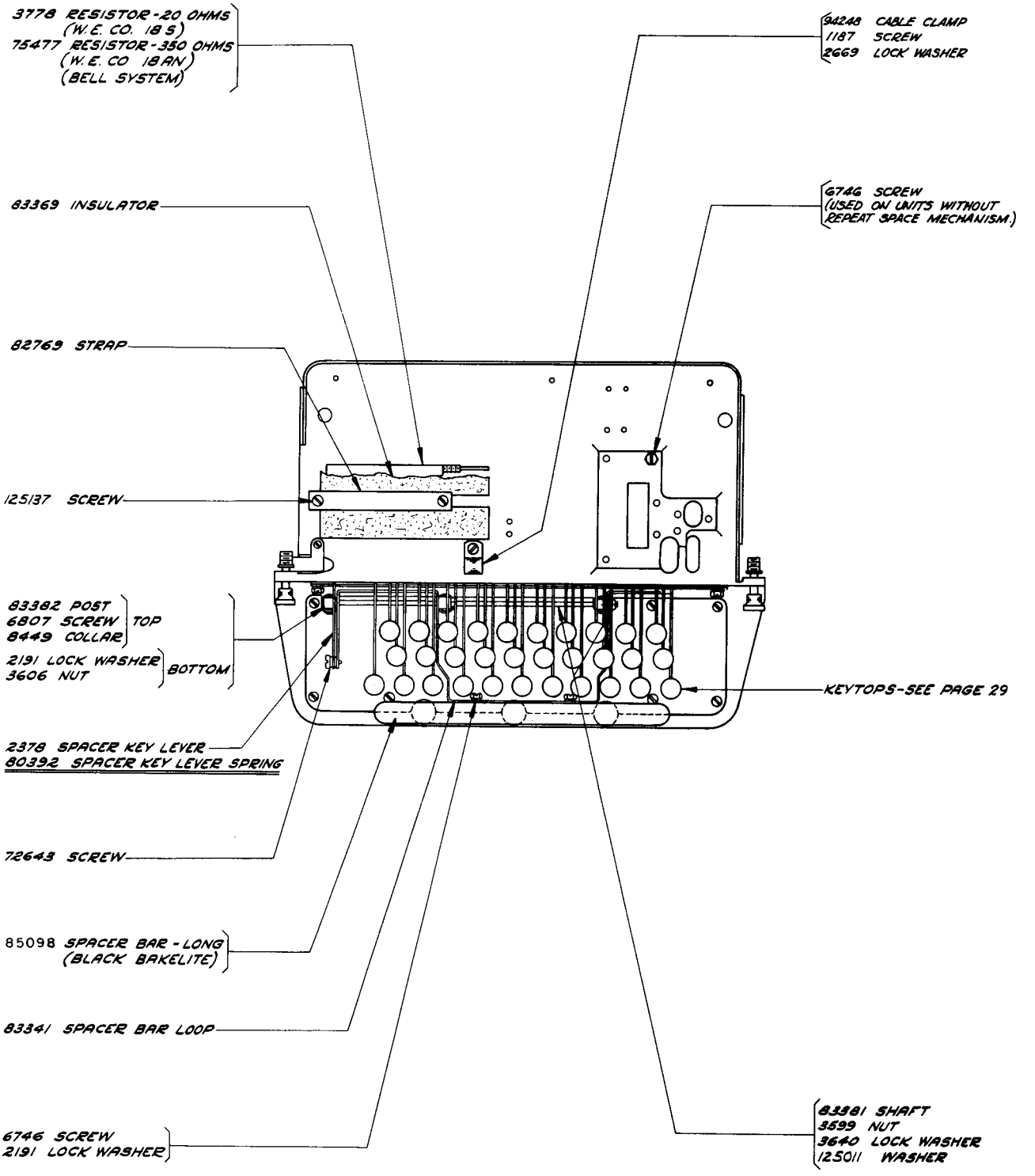

KEYBOARD BASE
(TOP VIEW)
(WITH SPACER KEY LEVER LOCATED AT LEFT SIDE)

(PARTS NOT SHOWN OR LISTED SAME AS SHOWN ON PAGE 1)

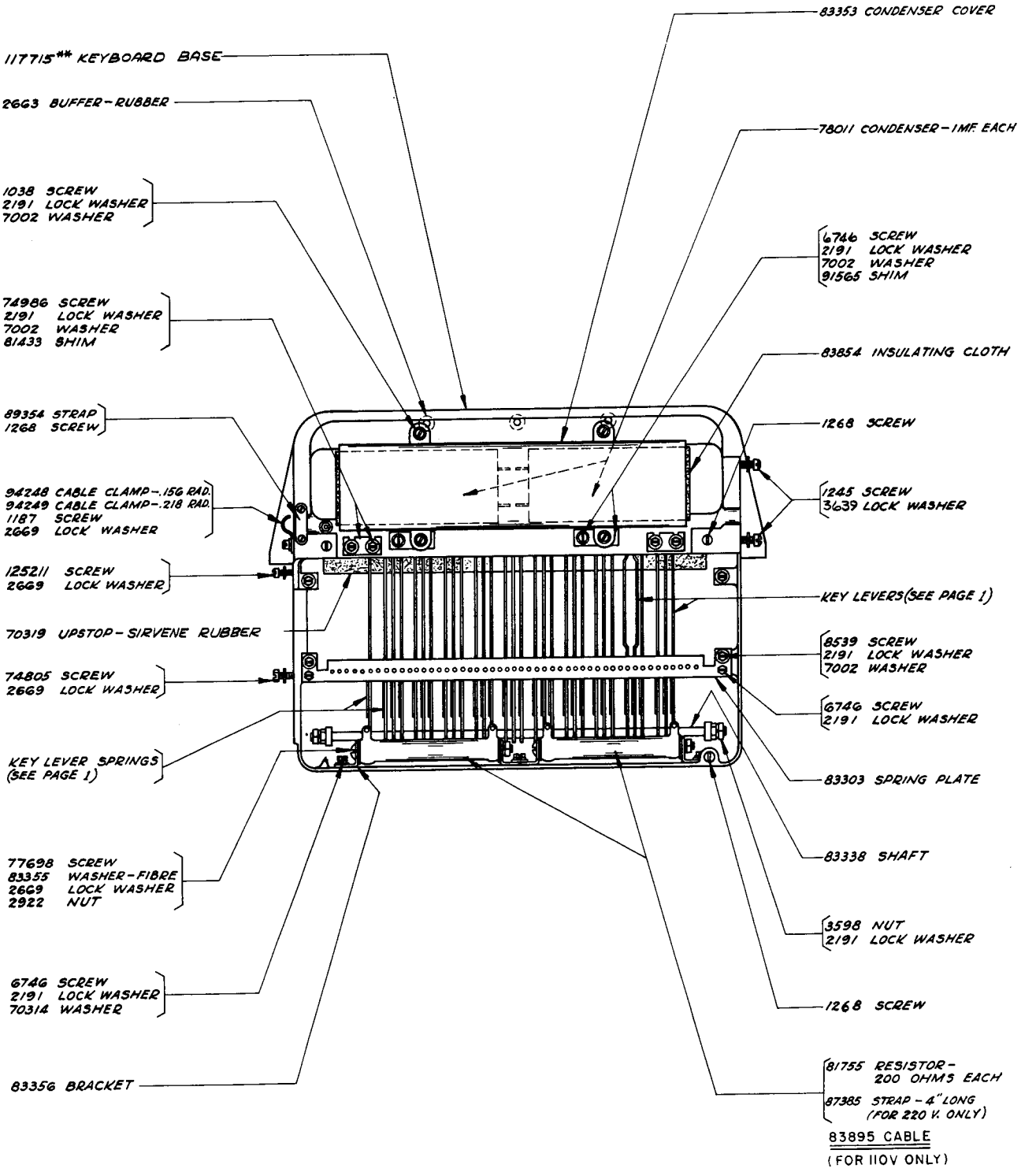

KEYBOARD BASE
(BOTTOM VIEW)

** SEE CHART ON PAGE D FOR FINISH SUFFIX.

SELECTOR BARS	
NO. STAMPED ON BAR	PART NUMBER
A-1	83314
A-2	83315
B-1	83316
B-2	83317
C-1	83318
C-2	83319
D-1	83320
D-2	83321
E-1	83322
E-2	83323
G-2	83324
H-1	83325
Ⓐ H-2	83326

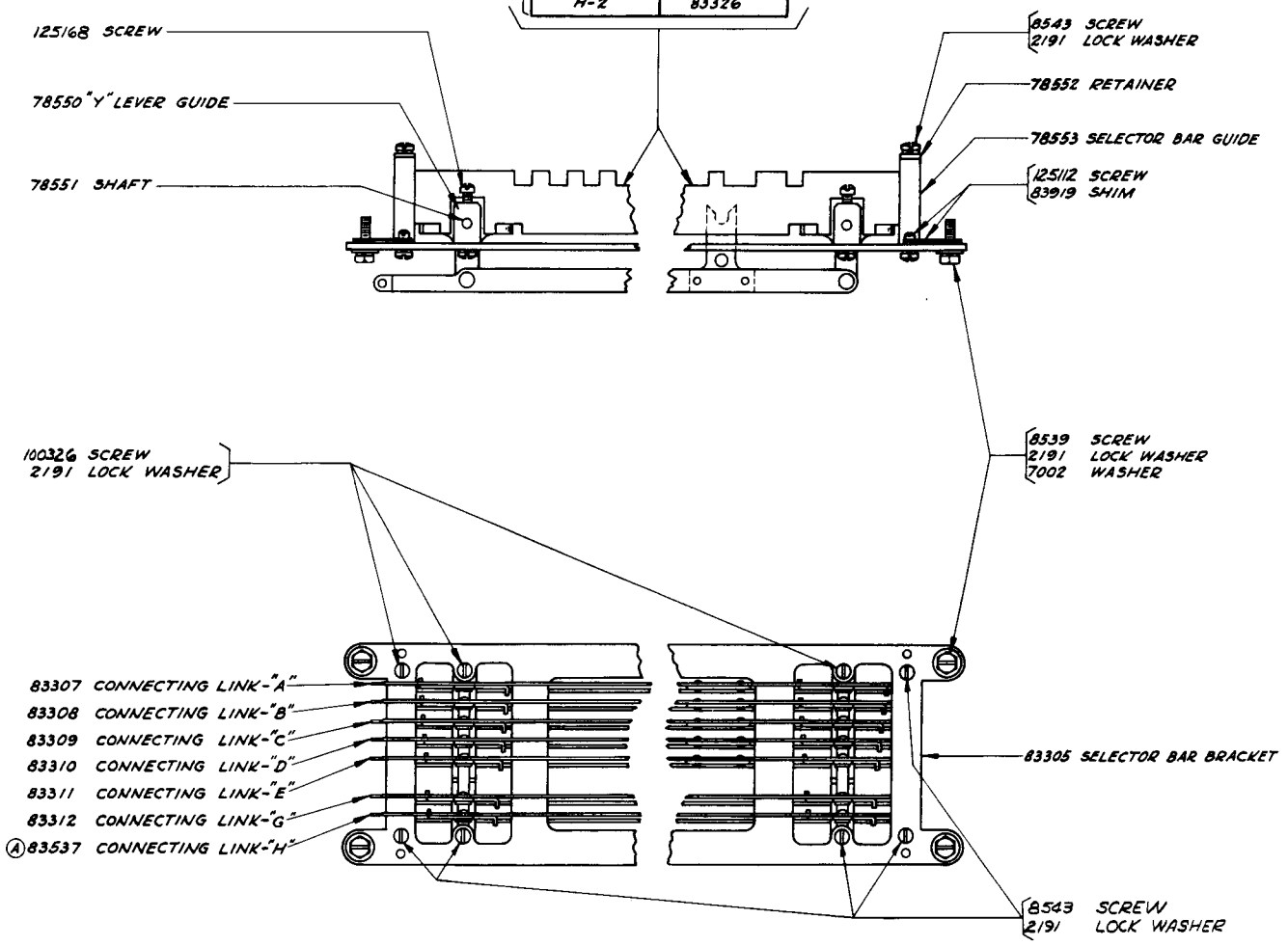

Ⓐ USED ONLY ON UNITS WITH 81727 COUNTER CONTROL CONTACT ASSEMBLY MOUNTED ON THE PERFORATOR UNIT (SEE PAGE 11).

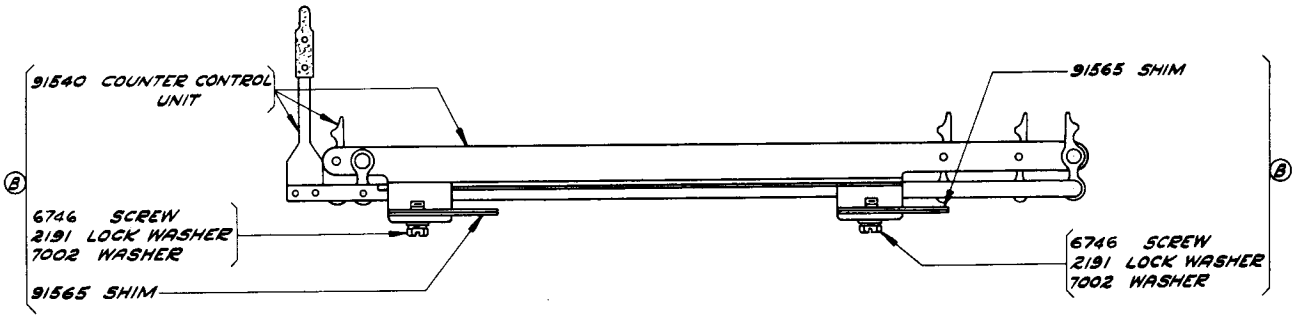

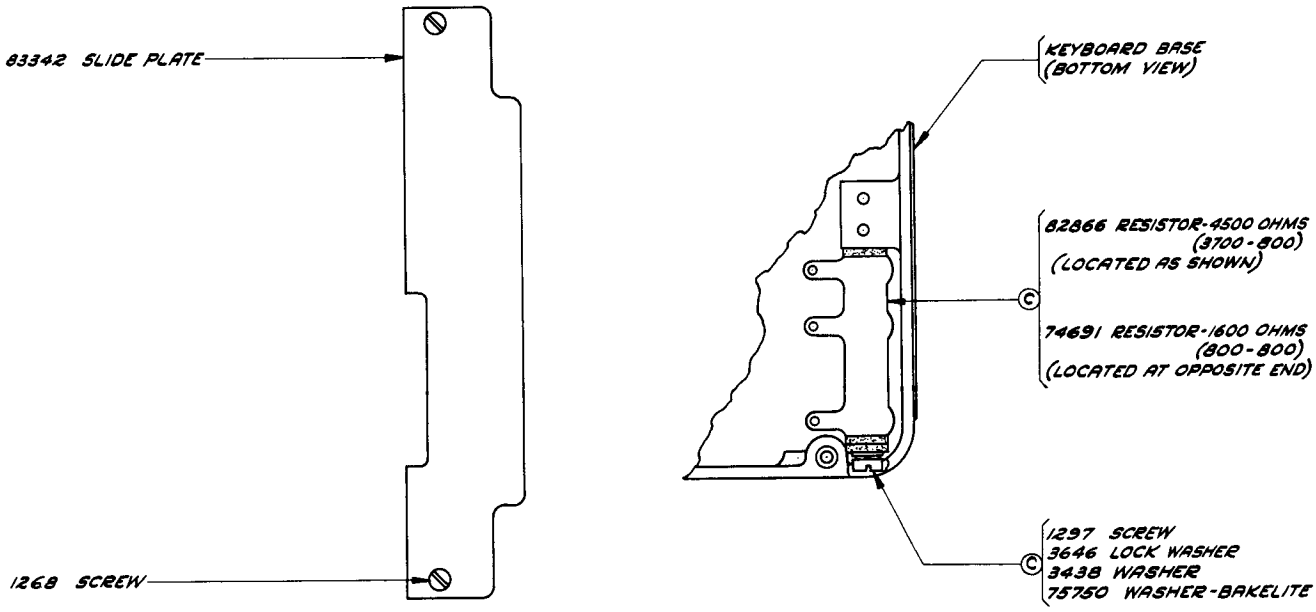

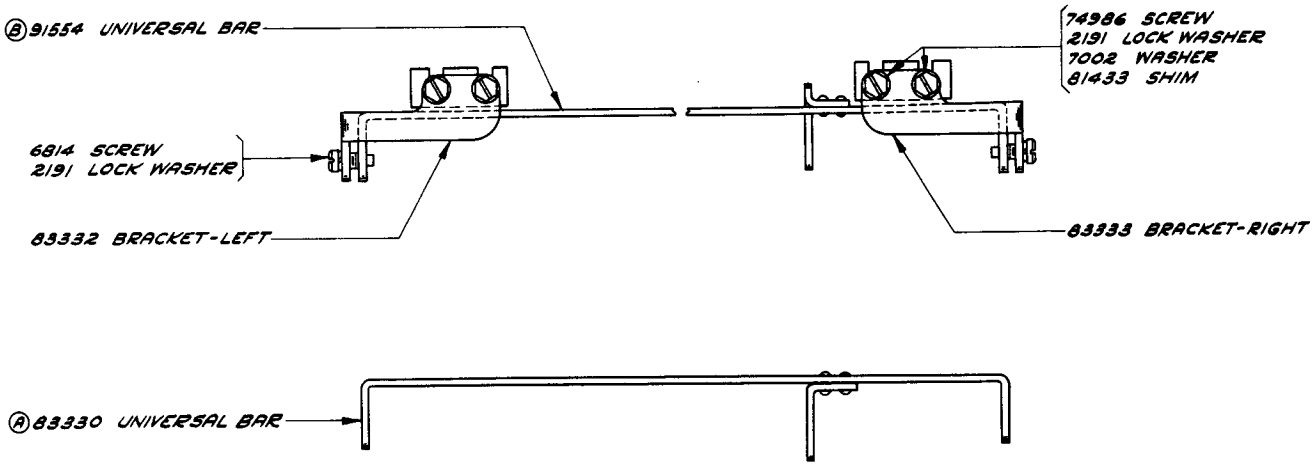

Ⓐ USED ONLY ON UNITS WITH 81727 COUNTER CONTROL CONTACT ASSEMBLY MOUNTED ON THE REPERFORATOR UNIT (SEE PAGE 11).

Ⓑ USED ONLY ON UNITS WITH 91571 COUNTER CONTROL CONTACT ASSEMBLY MOUNTED ON THE KEYBOARD (SEE PAGE 9).

Ⓒ ADDITIONAL PARTS REQUIRED TO COMPLETE 112549 SET OF PARTS (SEE PAGE 2).

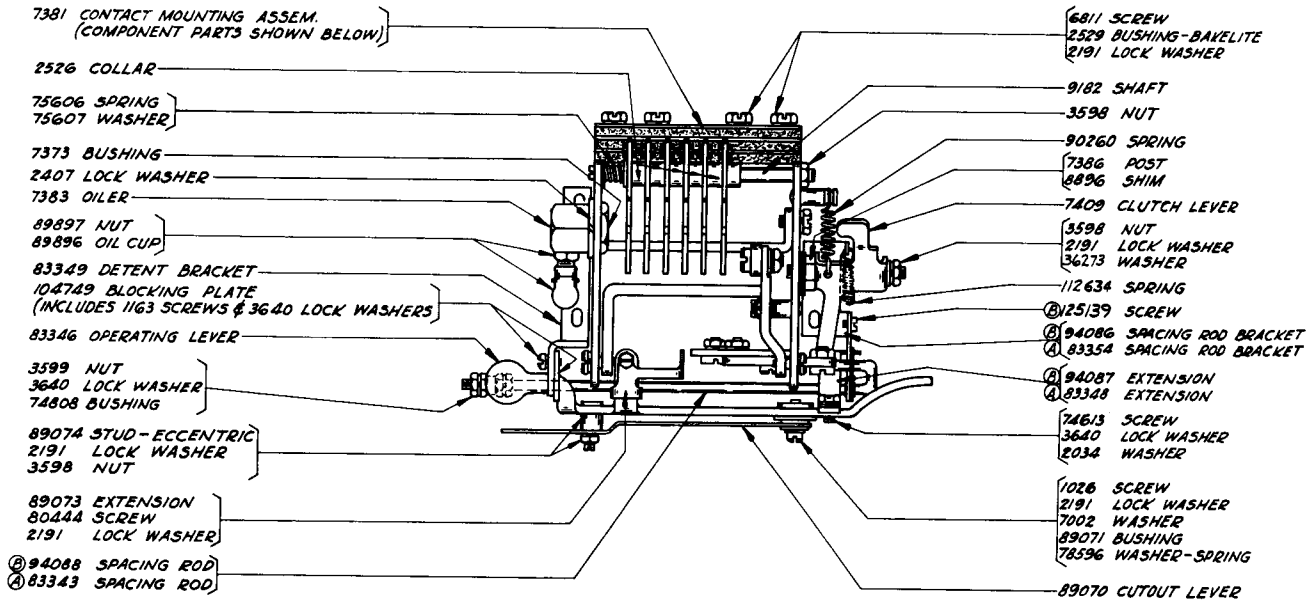

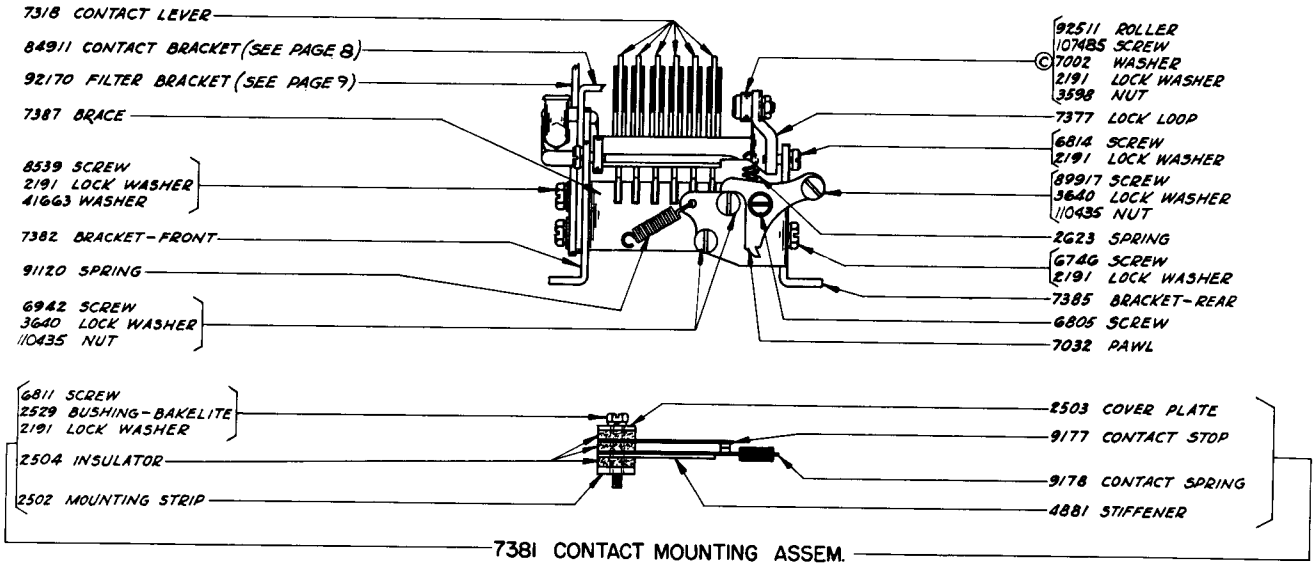

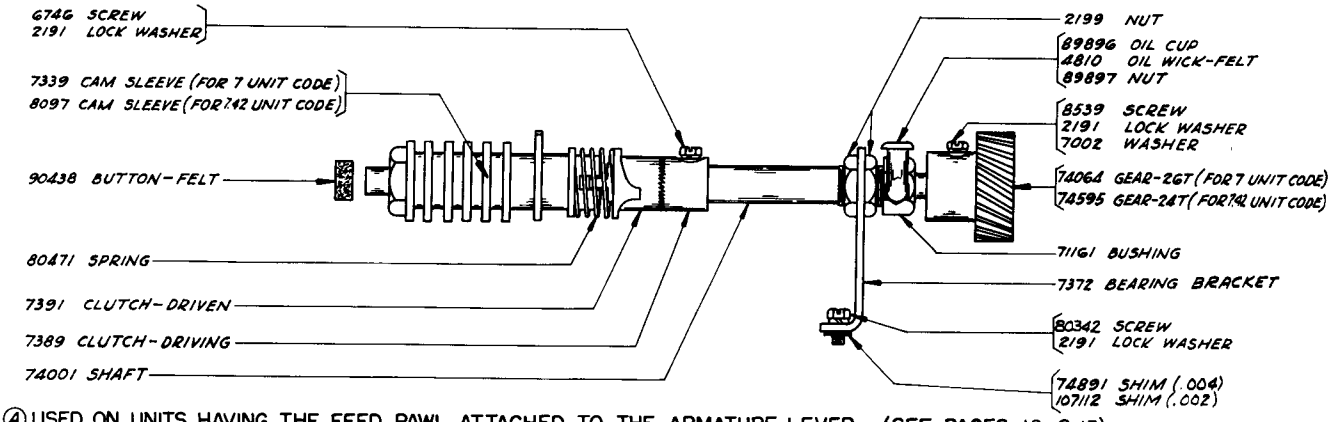

Ⓐ USED ON UNITS HAVING THE FEED PAWL ATTACHED TO THE ARMATURE LEVER. (SEE PAGES 12 & 13)

Ⓑ USED ON UNITS NOT HAVING THE FEED PAWL ATTACHED TO THE ARMATURE LEVER. (SEE PAGES 14 & 15)

Ⓒ 92511 ROLLER USED ONLY ON UNITS HAVING LOCK LOOP ROLLER ADJUSTMENT. UNITS NOT HAVING LOCK LOOP ROLLER ADJUSTMENT USE 7378 ROLLER.

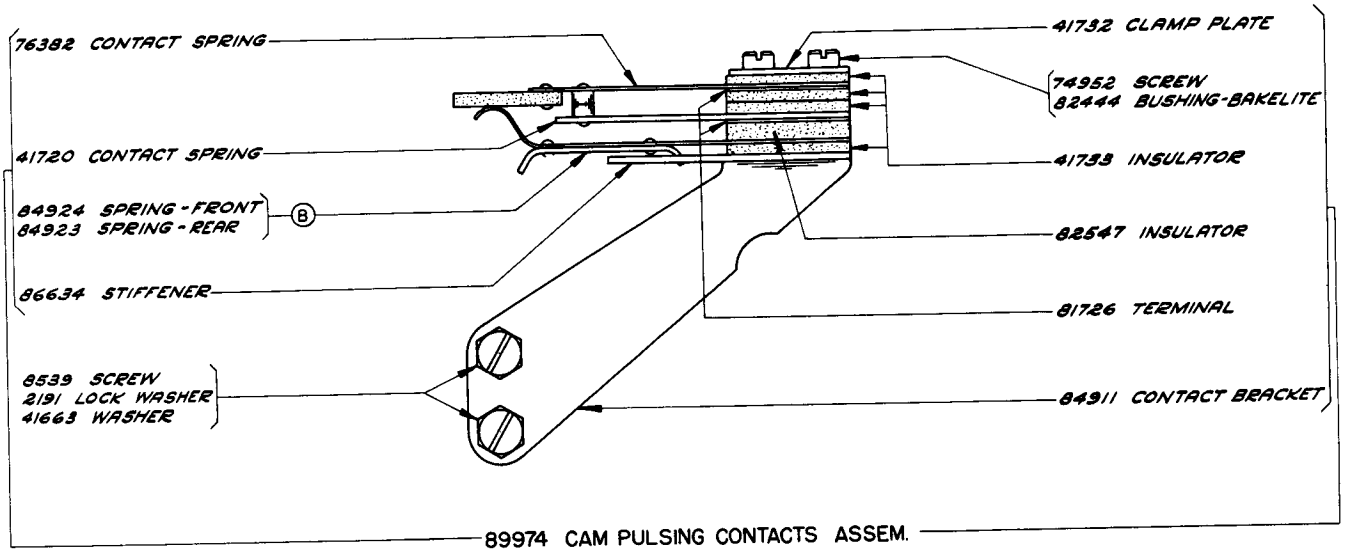

(OLD STYLE)

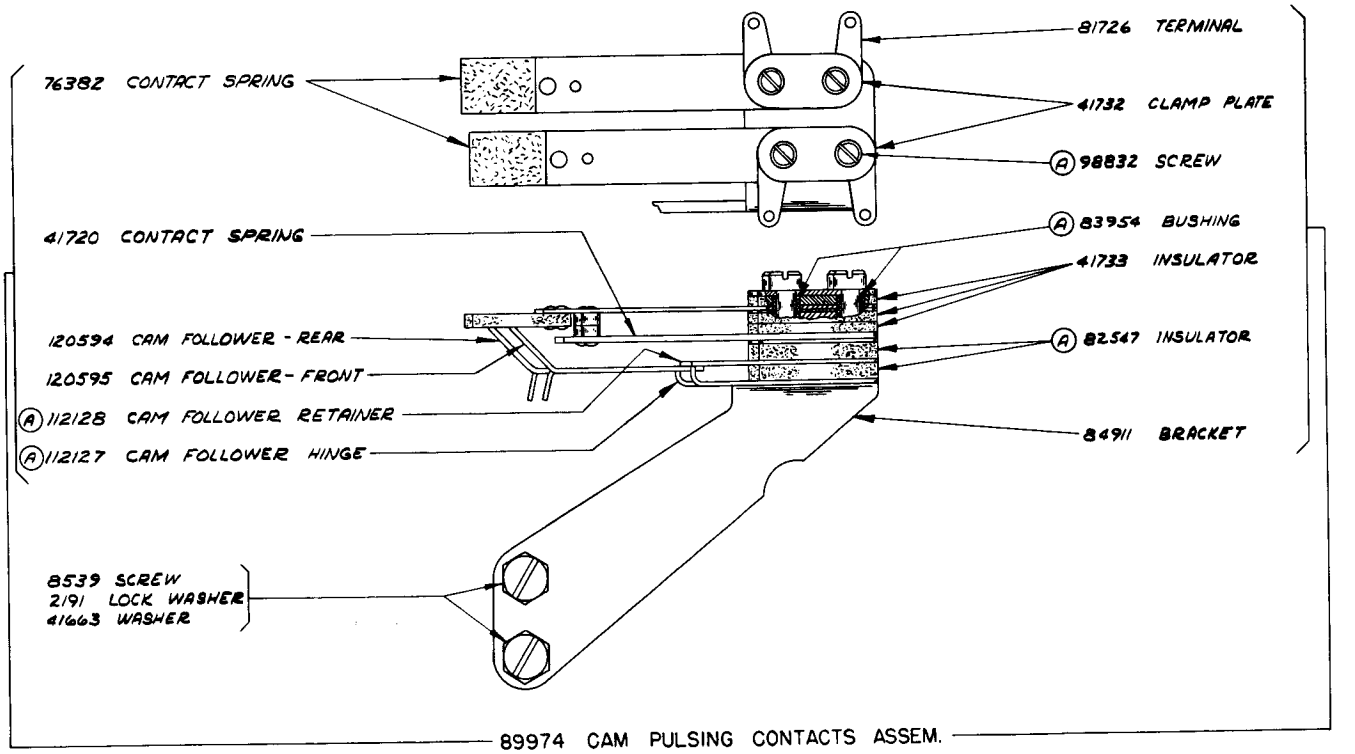

(NEW STYLE)

(A) SETS OF PARTS FOR CONVERTING OLD STYLE ASSEMBLY TO NEW STYLE ASSEMBLY
THE 106994 SET OF PARTS CONSISTS OF THE PARTS MARKED (A) PLUS THE 120595 CAM FOLLOWER
THE 106995 SET OF PARTS CONSISTS OF THE PARTS MARKED (A) PLUS THE 120594 CAM FOLLOWER
(IF ONE PART IS CONVERTED, CHANGE ALL PARTS IN THE ASSOCIATED SET)

REFER TO SPEC. 5622S FOR INSTALLATION INSTRUCTIONS

(B) PARTS MARKED (B) ARE NO LONGER AVAILABLE FOR MAINTENANCE.

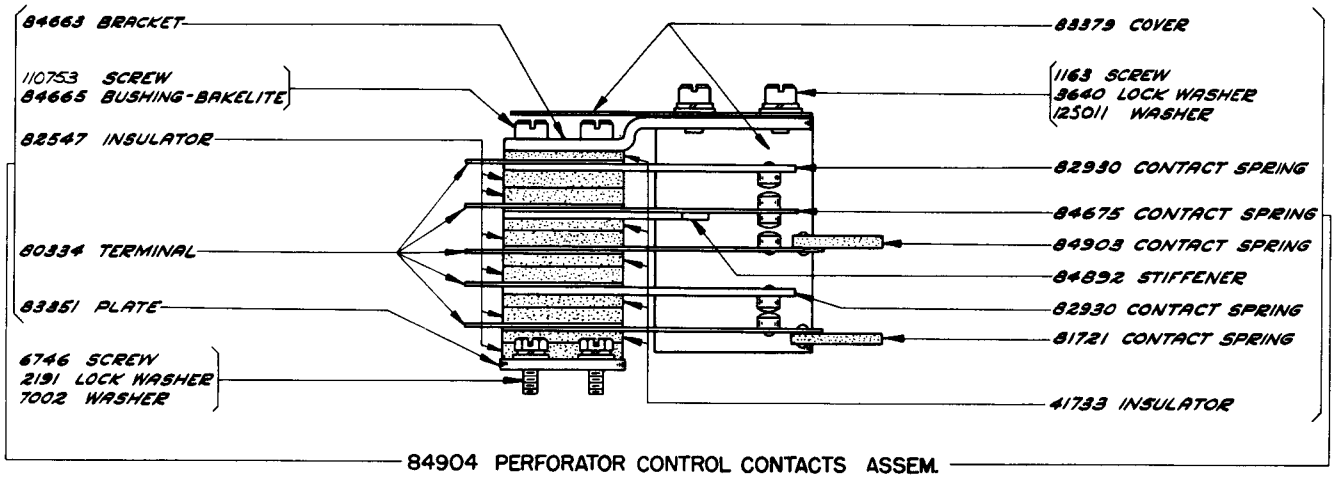
84663 BRACKET
110753 SCREW
84665 BUSHING-BAKELITE
82547 INSULATOR
80334 TERMINAL
83351 PLATE
6746 SCREW
2191 LOCK WASHER
7002 WASHER
83379 COVER
1163 SCREW
3640 LOCK WASHER
125011 WASHER
82930 CONTACT SPRING
84675 CONTACT SPRING
84903 CONTACT SPRING
84892 STIFFENER
82930 CONTACT SPRING
81721 CONTACT SPRING
41733 INSULATOR
84904 PERFORATOR CONTROL CONTACTS ASSEM.

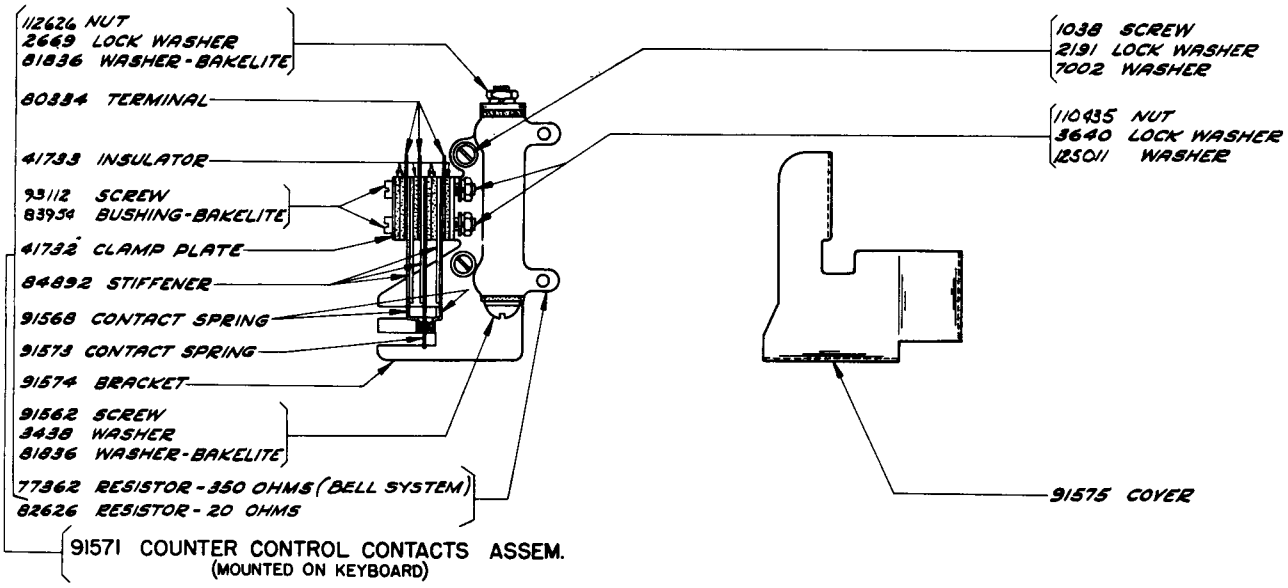
112626 NUT
2669 LOCK WASHER
81836 WASHER-BAKELITE
80334 TERMINAL
41733 INSULATOR
93112 SCREW
83934 BUSHING-BAKELITE
41732 CLAMP PLATE
84892 STIFFENER
91568 CONTACT SPRING
91573 CONTACT SPRING
91574 BRACKET
91562 SCREW
3438 WASHER
81836 WASHER-BAKELITE
77362 RESISTOR-350 OHMS (BELL SYSTEM)
82626 RESISTOR-20 OHMS
1038 SCREW
2191 LOCK WASHER
7002 WASHER
110435 NUT
3640 LOCK WASHER
125011 WASHER
91575 COVER
91571 COUNTER CONTROL CONTACTS ASSEM.
(MOUNTED ON KEYBOARD)

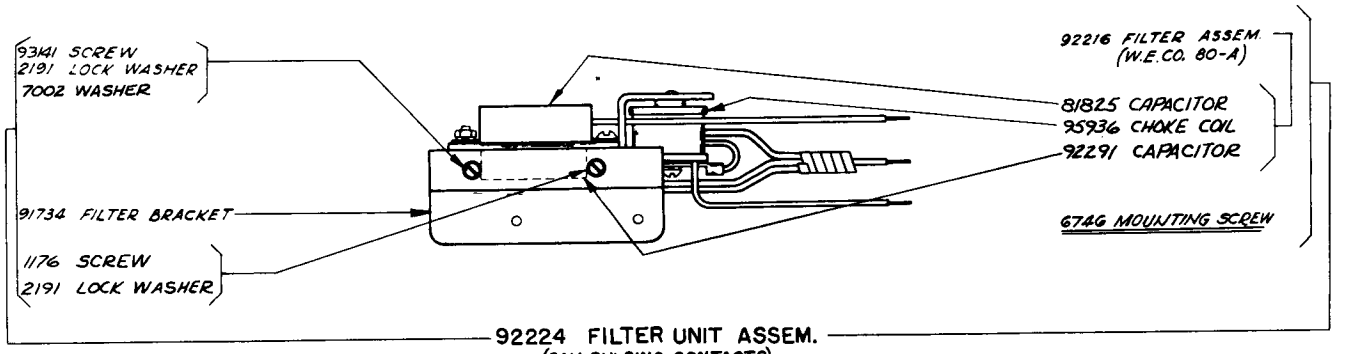

92224 FILTER UNIT ASSEM.
(CAM PULSING CONTACTS)
REFER TO SPEC. 5135S FOR INSTALLATION INSTRUCTIONS

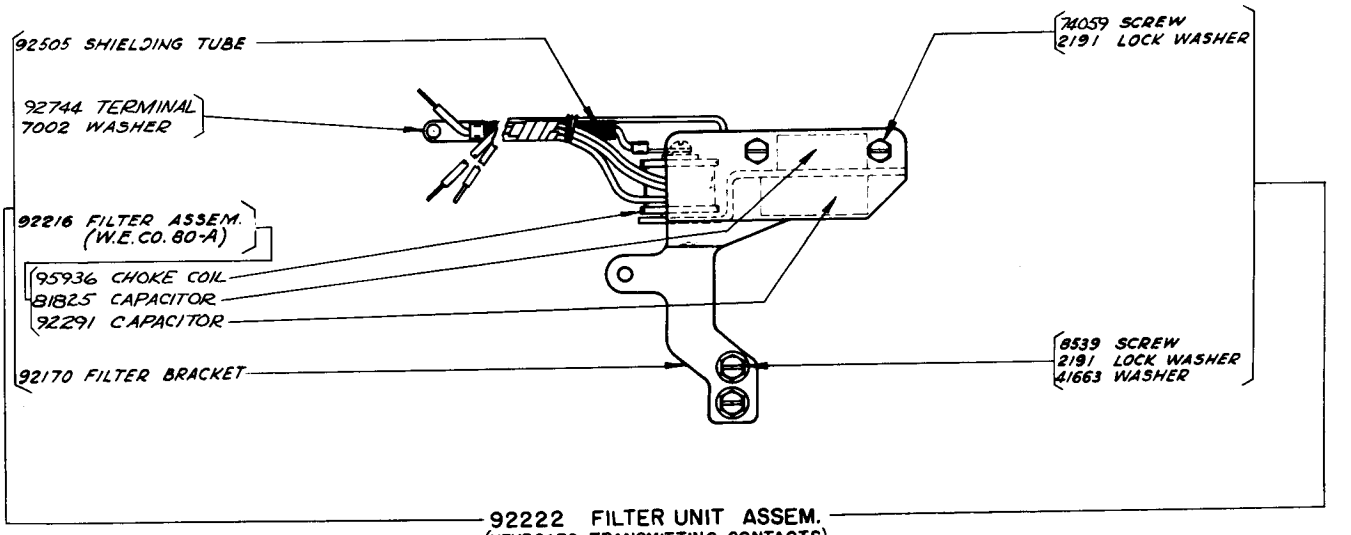

92222 FILTER UNIT ASSEM.
(KEYBOARD TRANSMITTING CONTACTS)
REFER TO SPEC. 5168S FOR INSTALLATION INSTRUCTIONS

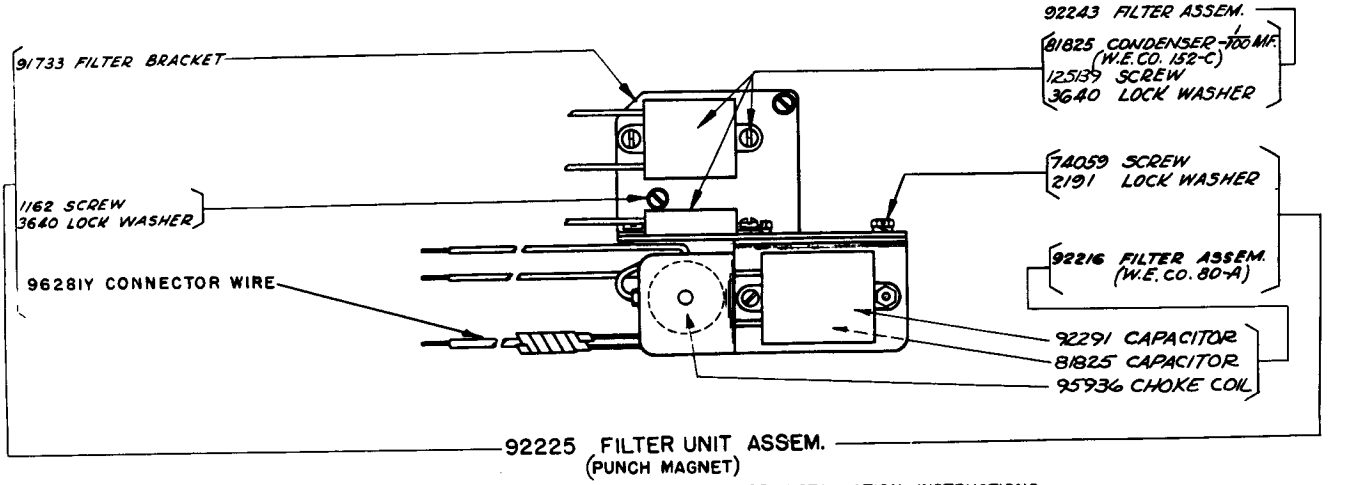

92225 FILTER UNIT ASSEM.
(PUNCH MAGNET)
REFER TO SPEC. 5136S FOR INSTALLATION INSTRUCTIONS

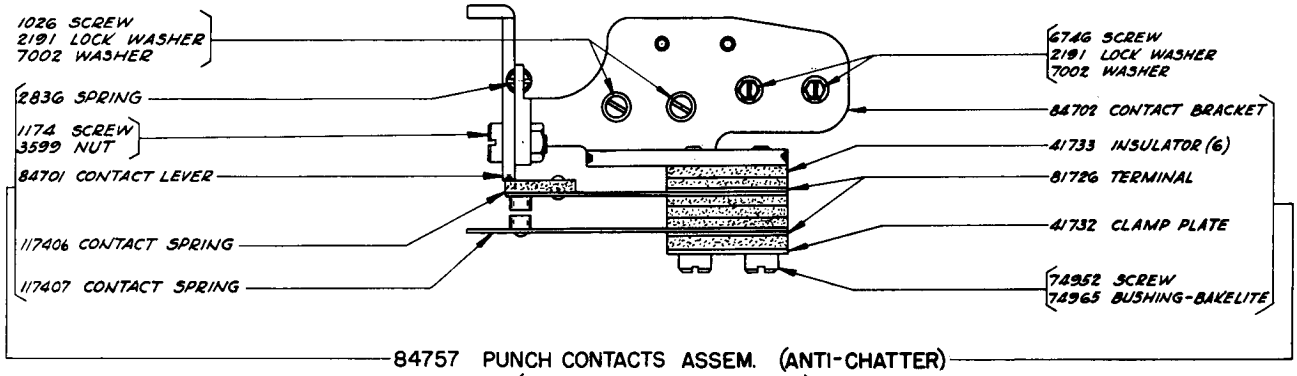

84757 PUNCH CONTACTS ASSEM. (ANTI-CHATTER)
(MOUNTED ON PERFORATOR UNIT)

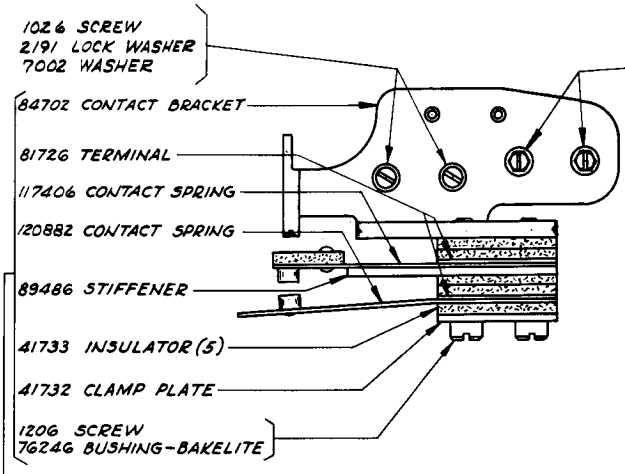

90177 PUNCH CONTACTS ASSEM. (PUSH CLOSE)
(MOUNTED ON PERFORATOR UNIT)

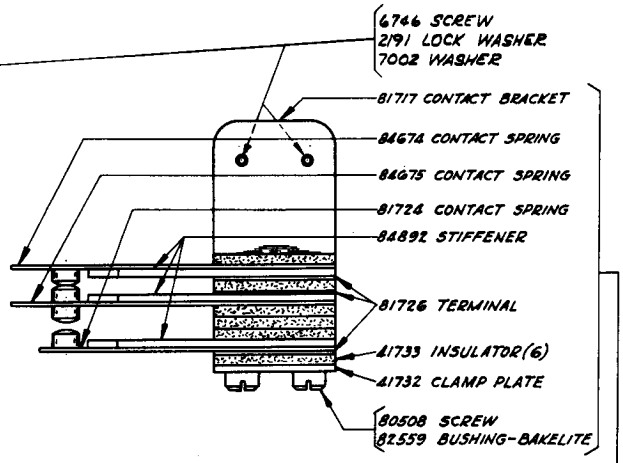

81727 COUNTER CONTROL CONTACTS ASSEM.
(MOUNTED ON PERFORATOR UNIT)

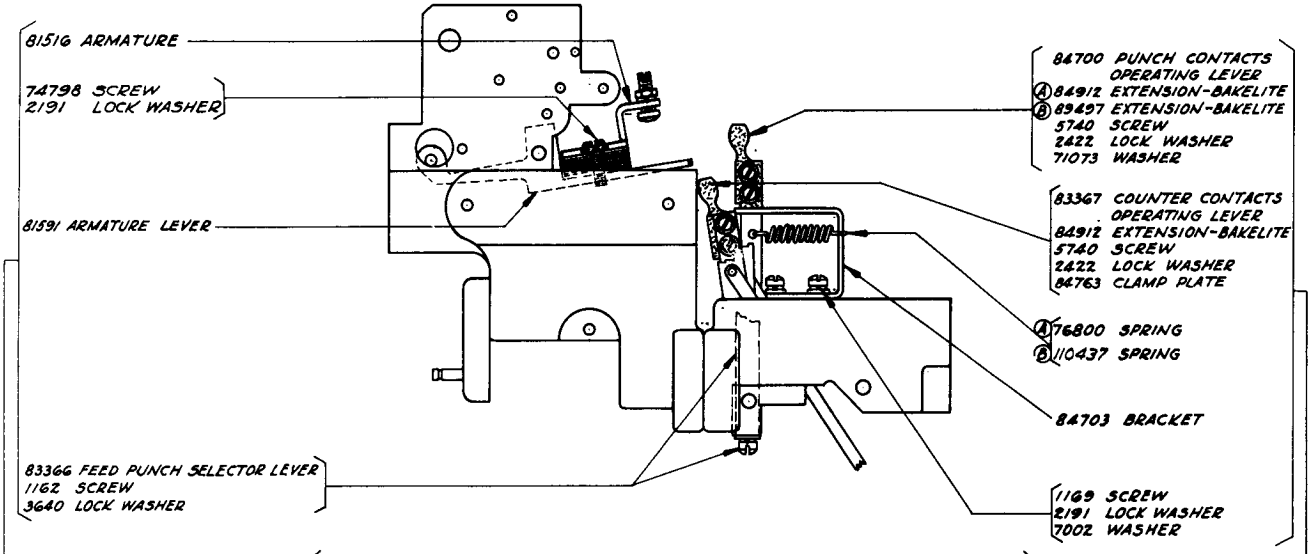

THESE PARTS ARE USED ONLY ON UNITS EQUIPPED WITH A ONE-PIECE ARMATURE LEVER (INCLUDING SELECTOR FINGER GUIDE) AND A NON-ADJUSTABLE FEED PUNCH SELECTOR LEVER

(PARTS NOT SHOWN OR LISTED SAME AS ON PAGES 12 & 13)

(A) USED WITH THE 84757 PUNCH CONTACTS ASSEM.
(B) USED WITH THE 90177 PUNCH CONTACTS ASSEM.

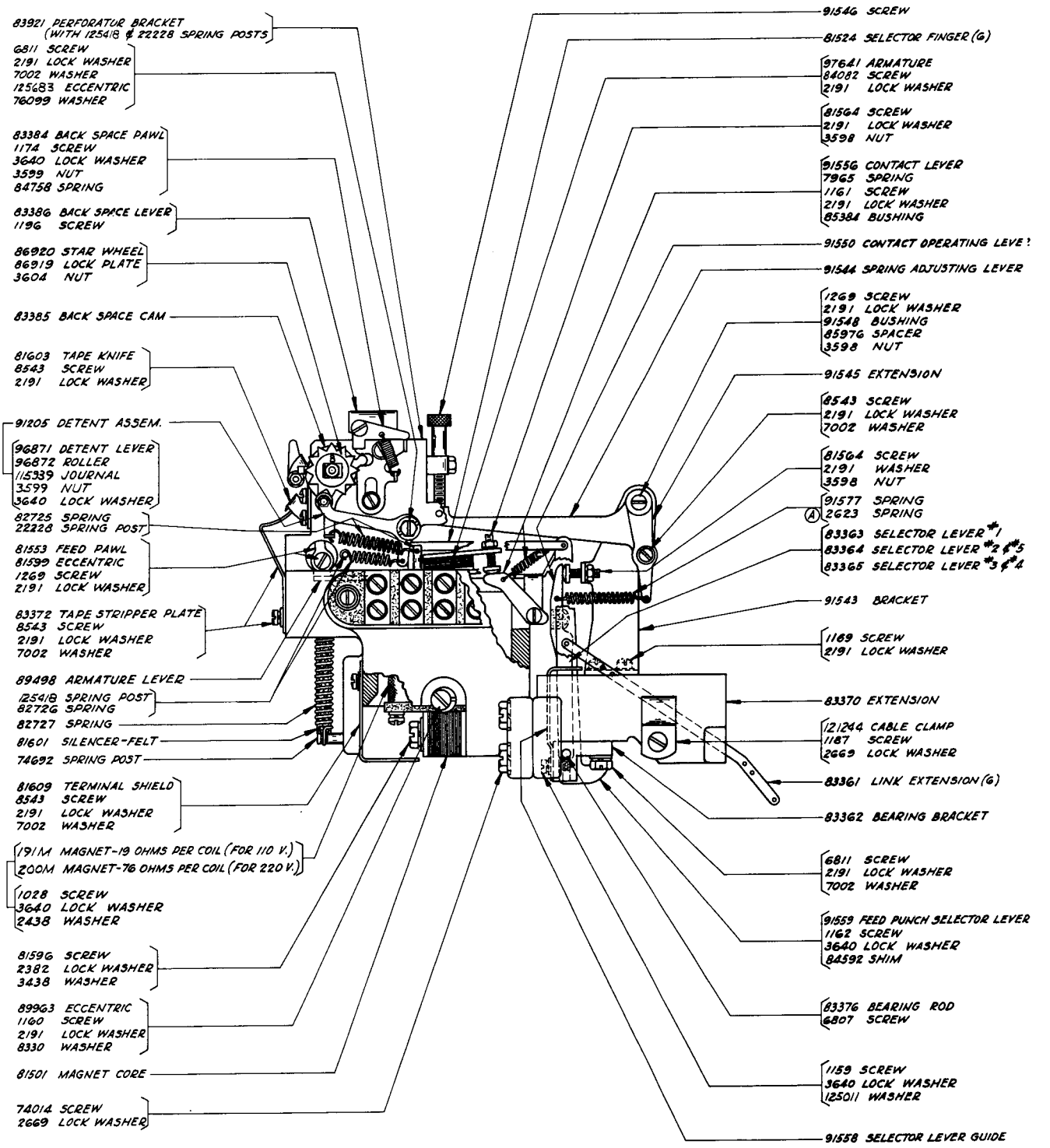

PUNCH UNIT
(FRONT VIEW)

ALL PARTS LISTED ON THIS PAGE AND PAGE 11 ARE USED ON UNITS HAVING THE FEED PAWL ATTACHED TO THE ARMATURE LEVER.

(A) USED ON UNITS HAVING THE 102883 PUNCH CONTACT AND LATCH ASSEM. (SEE PAGE 16)

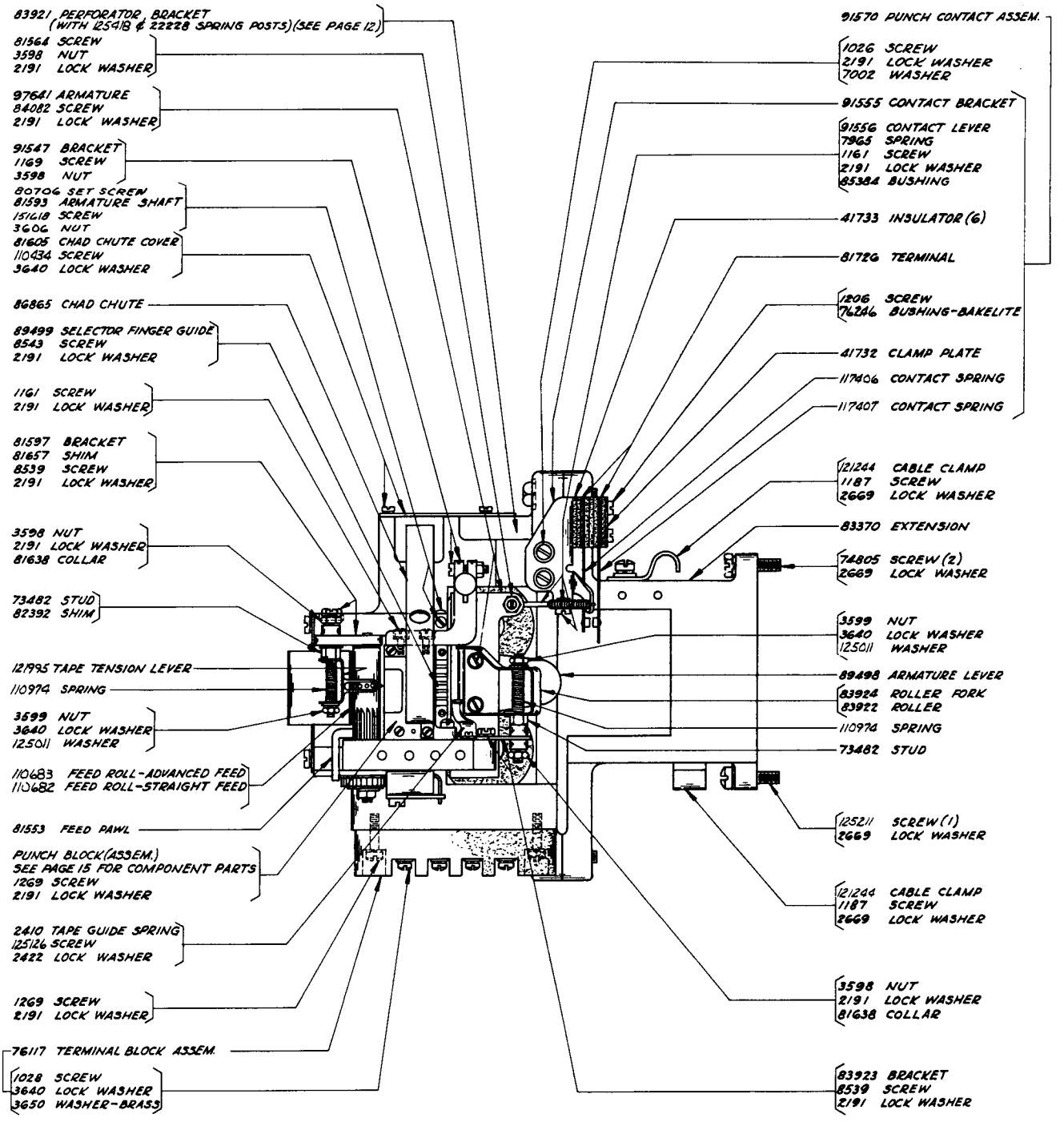

PUNCH UNIT
(TOP VIEW)

ALL PARTS LISTED ON THIS PAGE AND PAGE 12 ARE USED ON UNITS HAVING THE FEED PAWL ATTACHED TO THE ARMATURE LEVER.

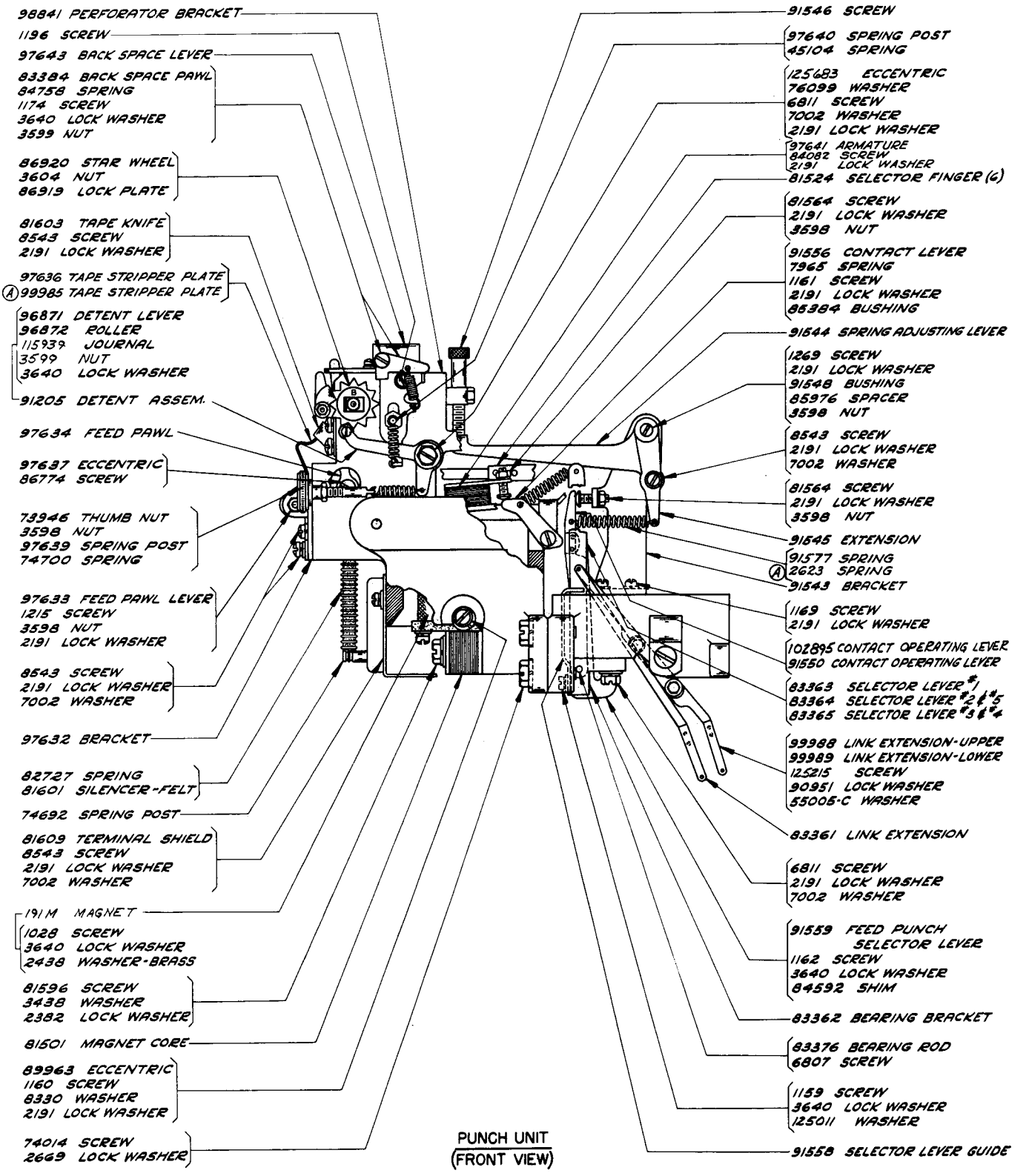

PUNCH UNIT
(FRONT VIEW)

ALL PARTS LISTED ON THIS PAGE AND PAGE 15 ARE USED ON UNITS NOT HAVING THE FEED PAWL ATTACHED TO THE ARMATURE LEVER.

(A) USED ON UNITS HAVING THE 102883 PUNCH CONTACT AND LATCH ASSEM. (SEE PAGE 16)

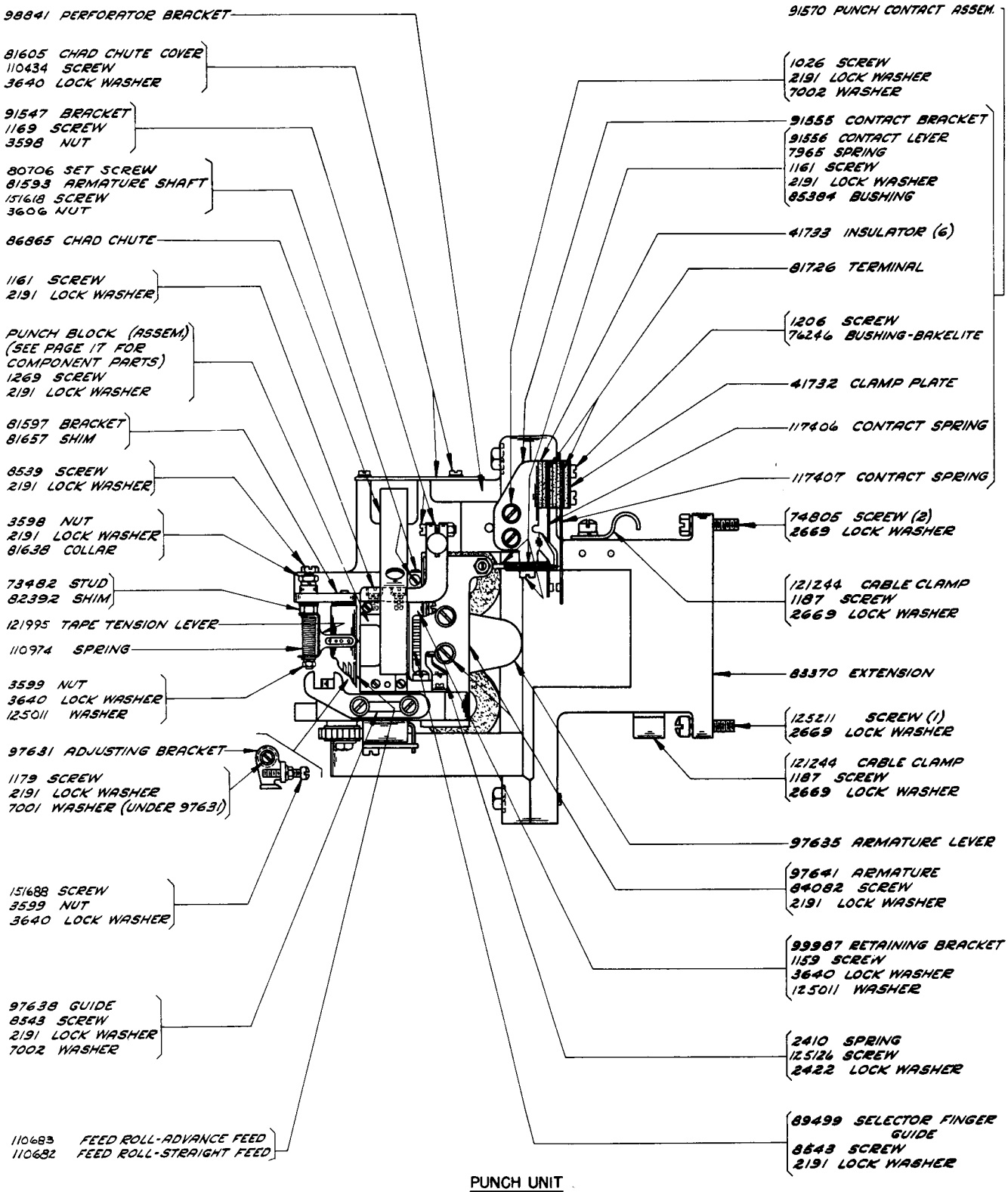

PUNCH UNIT
(TOP VIEW)

ALL PARTS LISTED ON THIS PAGE AND PAGE 14 ARE USED ON UNITS NOT HAVING THE FEED PAWL ATTACHED TO THE ARMATURE LEVER.

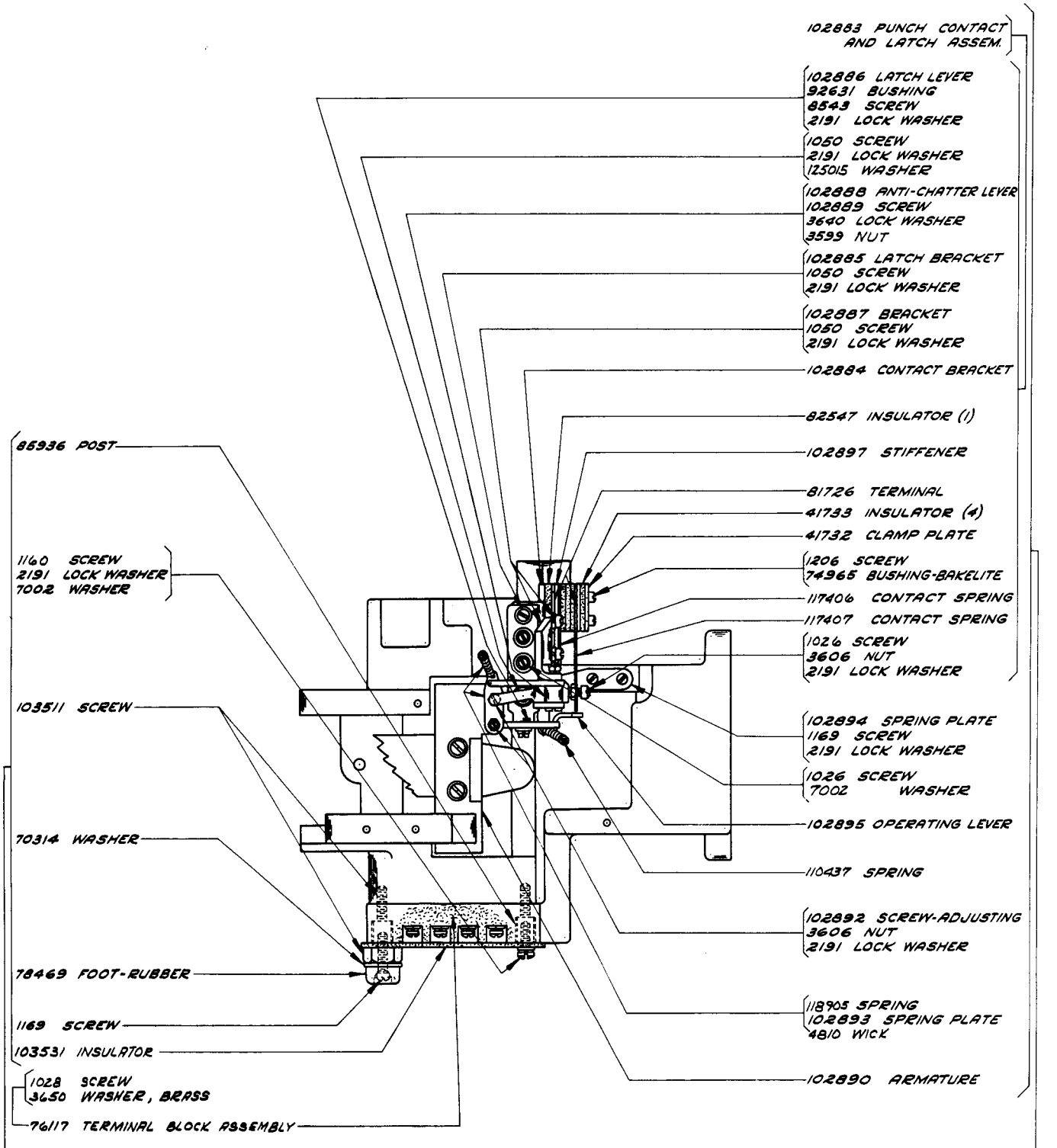

(PARTS NOT SHOWN OR LISTED SAME AS SHOWN ON PAGES 14 & 15)

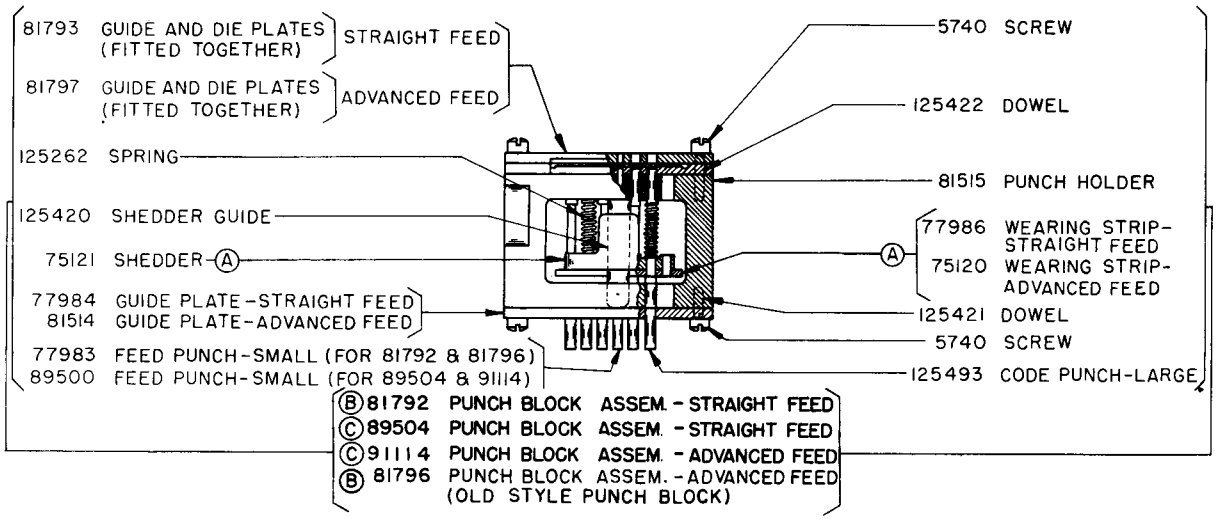

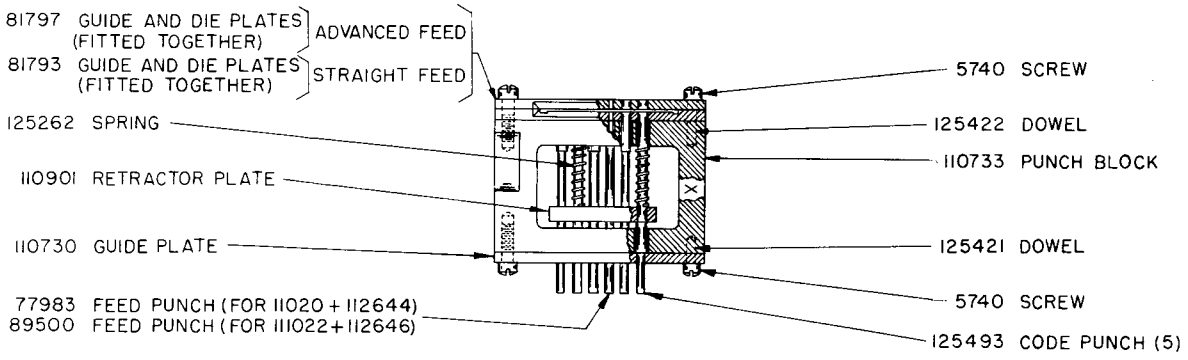

(B)-111020 PUNCH BLOCK ASSEM.-STRAIGHT FEED (REPLACES 81792)
(C)—111022 PUNCH BLOCK ASSEM.-STRAIGHT FEED (REPLACES 89504)

(B)-112644 PUNCH BLOCK ASSEM.-ADVANCED FEED (REPLACES 81796)
(C)—112646 PUNCH BLOCK ASSEM.-ADVANCED FEED (REPLACES 91114)
(NEW STYLE PUNCH BLOCK)

(A) PARTS MARKED (A) ARE NO LONGER AVAILABLE FOR MAINTENANCE.

(B) THE 111020 OR 112644 (FORMERLY 81792 & 81796) PUNCH BLOCK ASSEMBLY IS USED WHEN THE UNIT IS EQUIPPED WITH THE 81591 ARMATURE LEVER. (SEE PAGE 11)

(C) THE 111022 OR 112646 (FORMERLY 89504 & 91114) PUNCH BLOCK ASSEMBLY IS USED WITH ALL ARMATURE ASSEMBLIES THAT INCLUDE THE 89499 SELECTOR FINGER GUIDE (SEE PAGES 13 AND 15). FOR IDENTIFICATION THE 111022 & 112646 (OR 89504 & 91114) PUNCH BLOCK ASSEMBLIES HAVE AN "X" STAMPED AFTER THE SERIAL NUMBER.

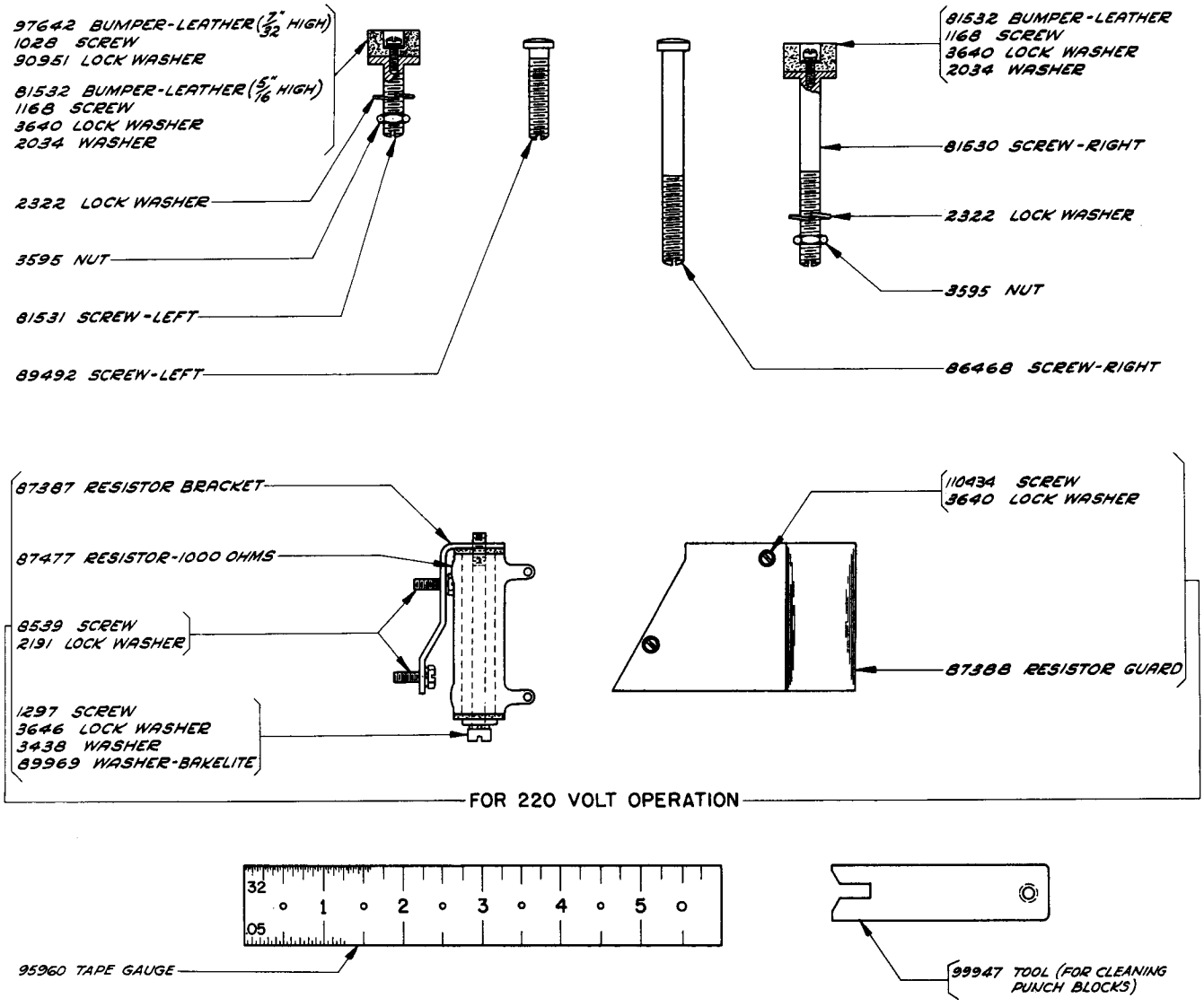

95960 TAPE GAUGE

99947 TOOL (FOR CLEANING PUNCH BLOCKS)

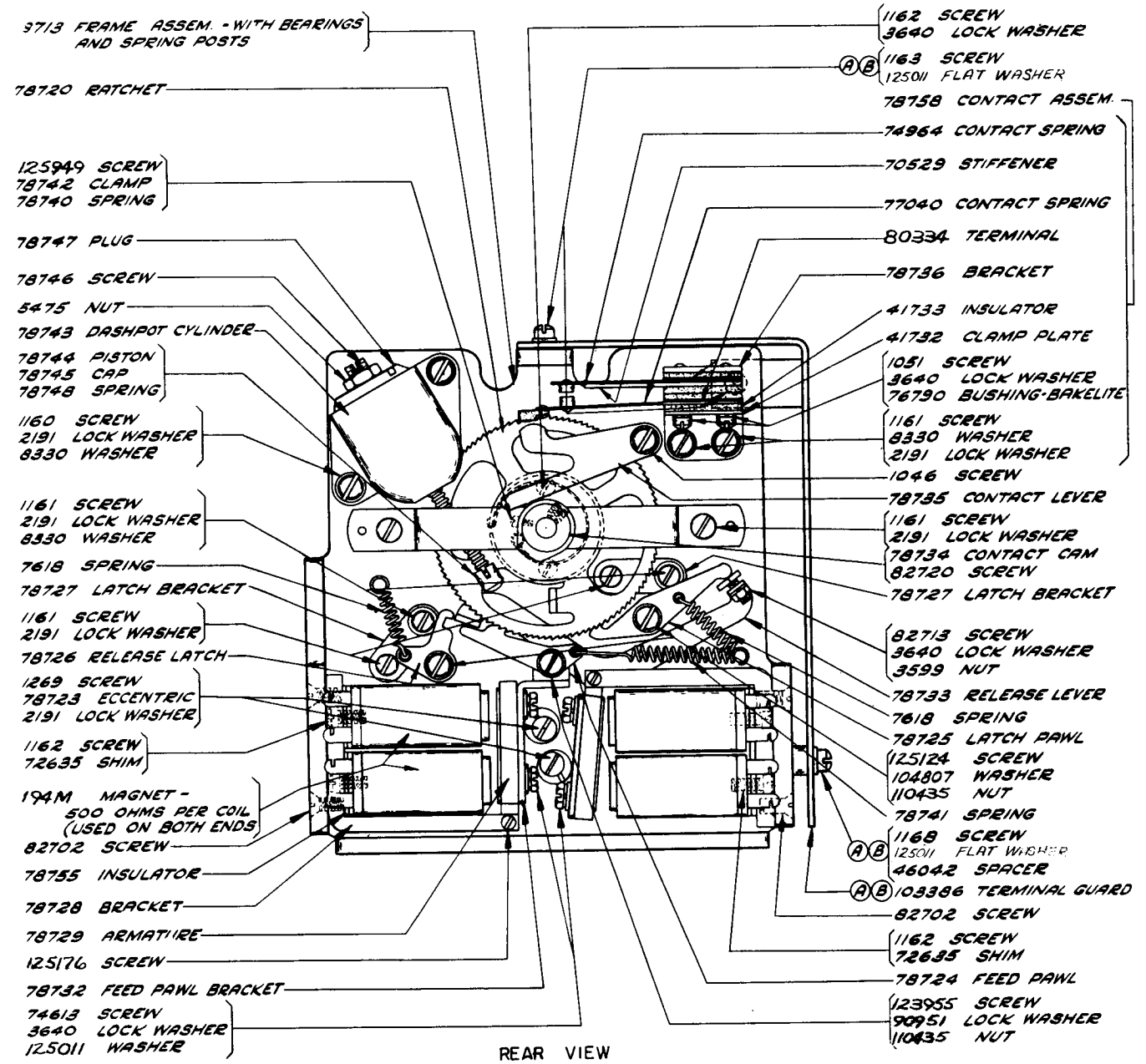

83437 COUNTER MECHANISM ASSEM. (EXCLUDES PARTS MARKED (A))
(FOR LEFT OR RIGHT HAND MOUNTING)

(OLD STYLE)

(B) PARTS ARE USED ONLY WHEN COUNTER MECHANISM ASSEM. IS MOUNTED ON THE LEFT HAND SIDE.

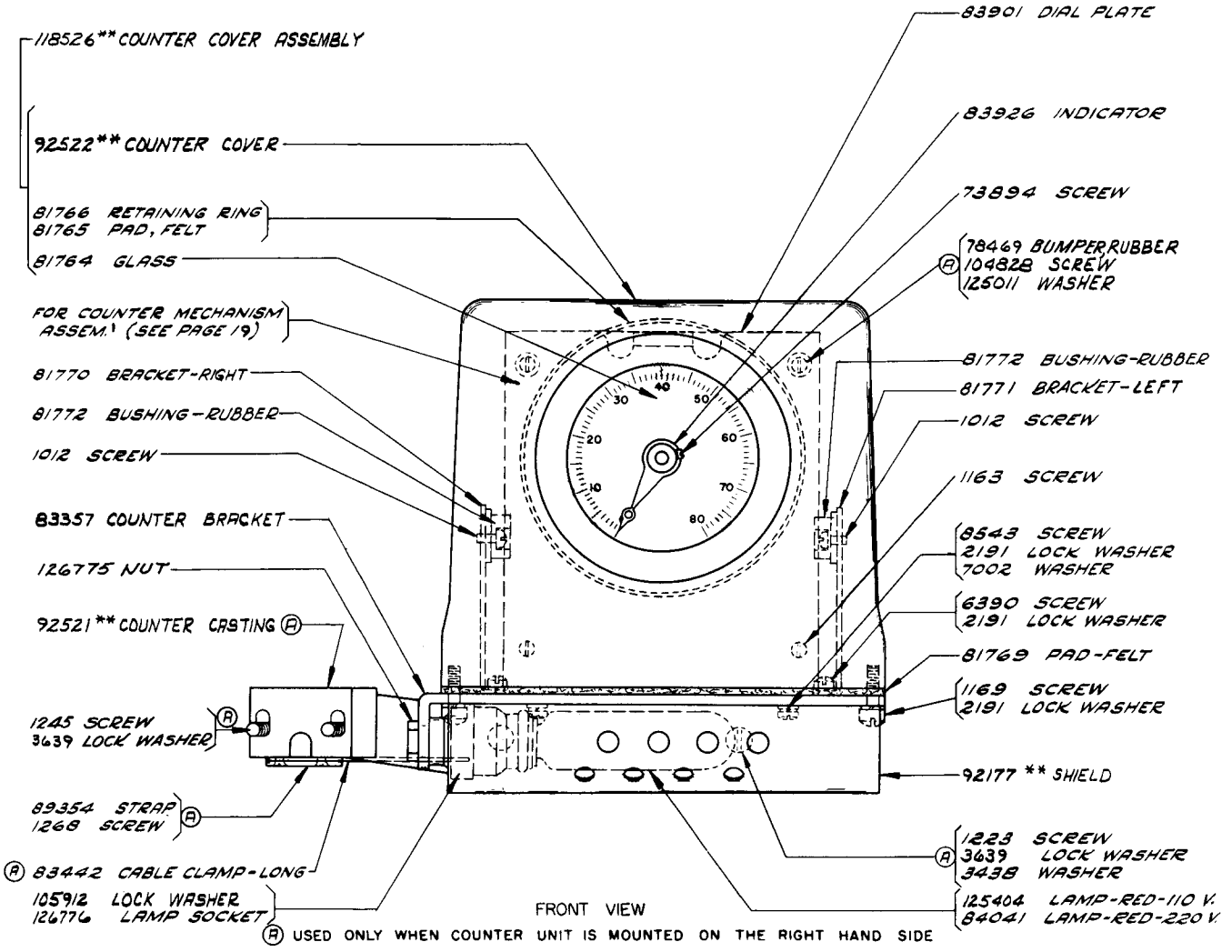

FRONT VIEW

(A) USED ONLY WHEN COUNTER UNIT IS MOUNTED ON THE RIGHT HAND SIDE

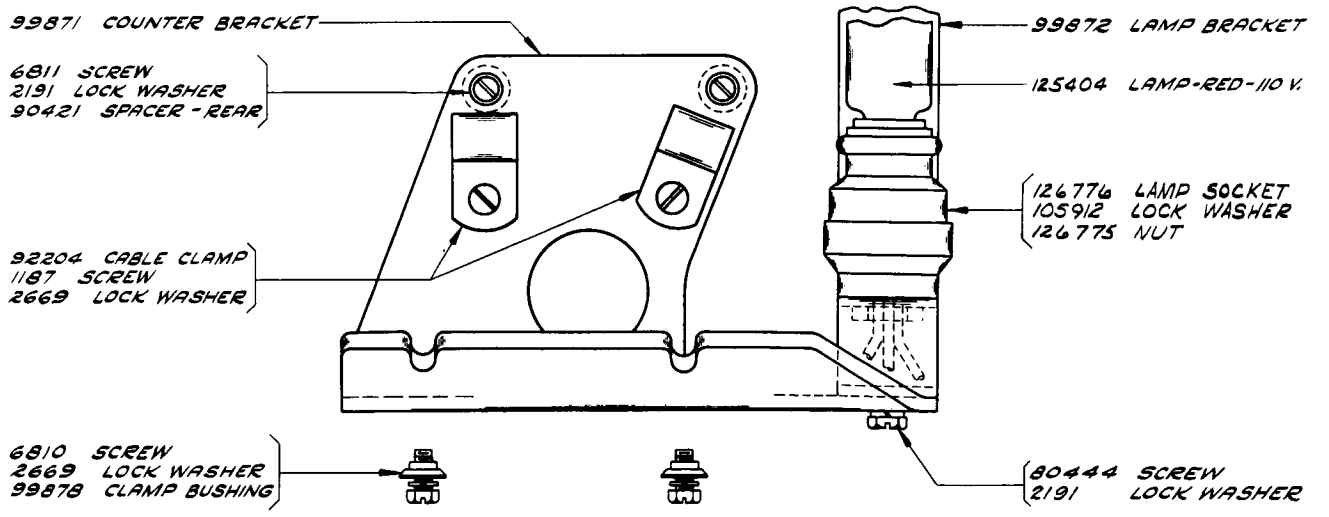

FRONT VIEW

USED ONLY WHEN COUNTER UNIT IS MOUNTED ON THE LEFT HAND SIDE

**SEE CHART ON PAGE D FOR FINISH SUFFIX.

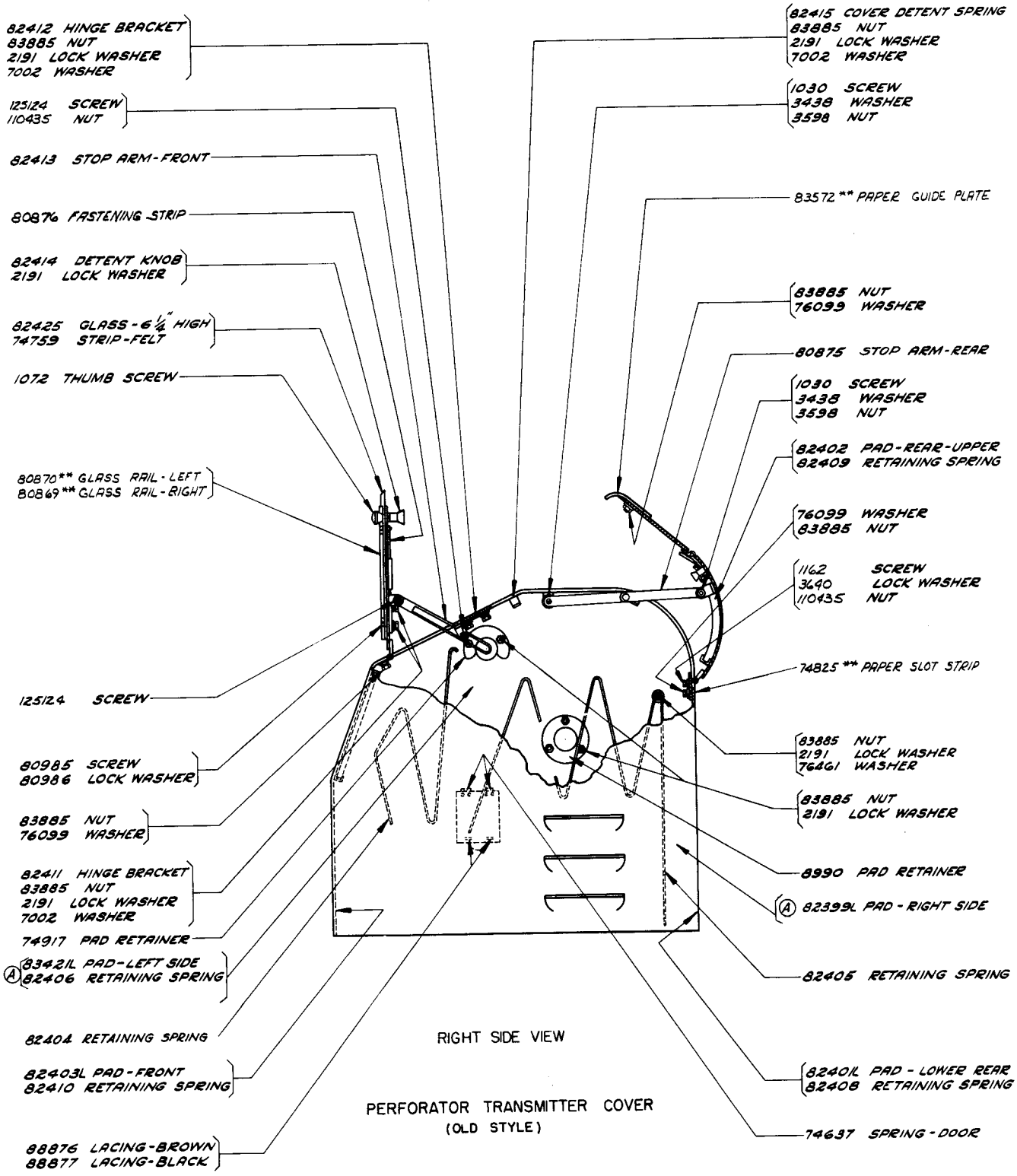

RIGHT SIDE VIEW

PERFORATOR TRANSMITTER COVER
(OLD STYLE)

(A) USED ON COVERS EQUIPPED WITH A RIGHT HAND OFFSET COPYHOLDER.

** SEE CHART ON PAGE D FOR FINISH SUFFIX.

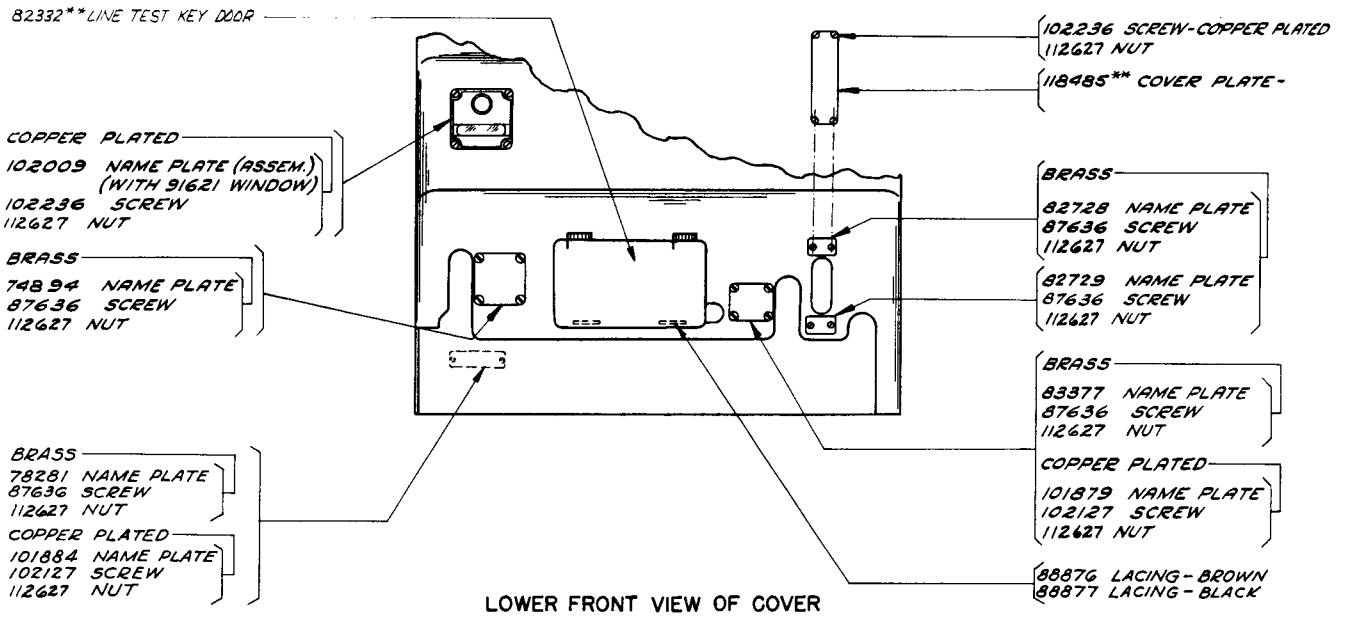

LOWER FRONT VIEW OF COVER
(OLD STYLE)

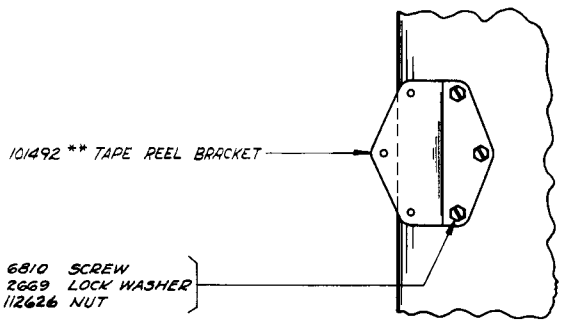

LEFT SIDE VIEW OF COVER

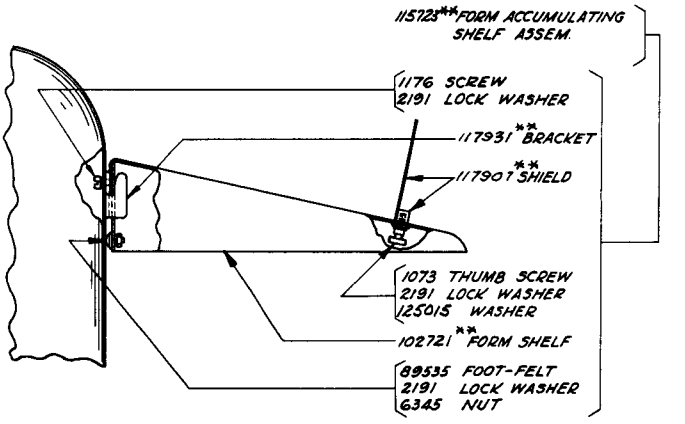

RIGHT SIDE VIEW OF COVER

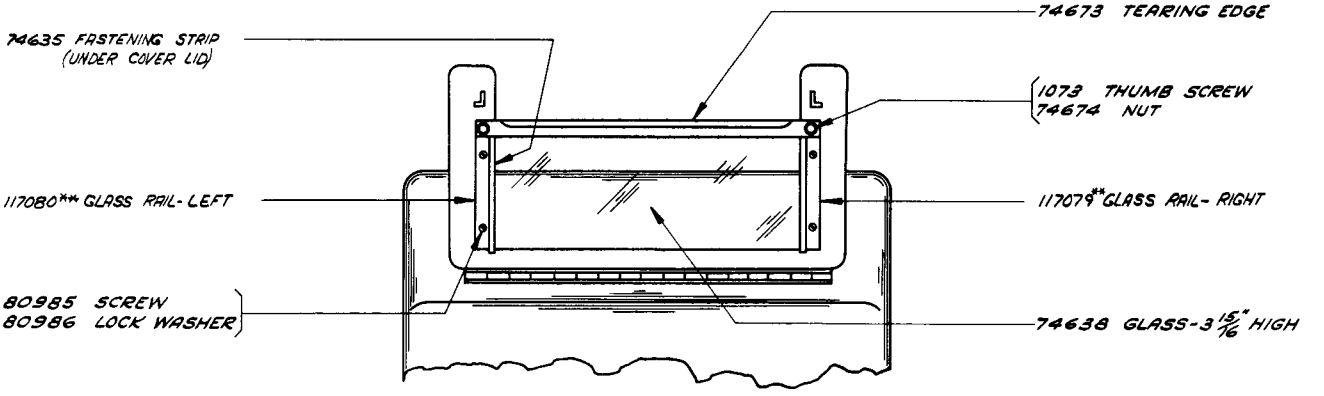

UPPER FRONT VIEW OF COVER
(SHOWING PARTS REQUIRED FOR METAL TEARING EDGE)

**SEE CHART ON PAGE D FOR FINISH SUFFIX.

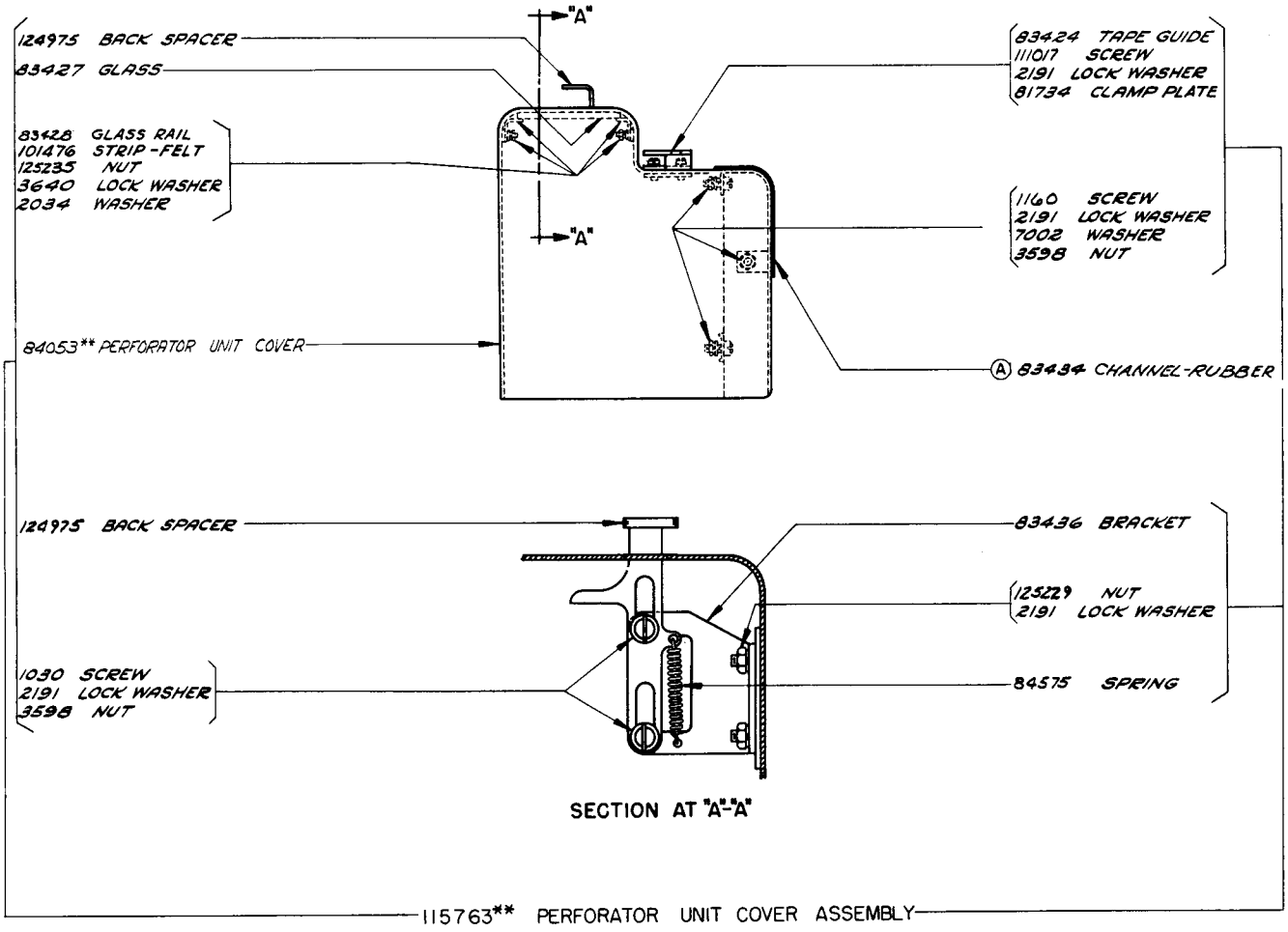

Ⓐ NOT INCLUDED WITH 115763**

USED ONLY WHEN COUNTER UNIT IS MOUNTED ON RIGHT HAND SIDE

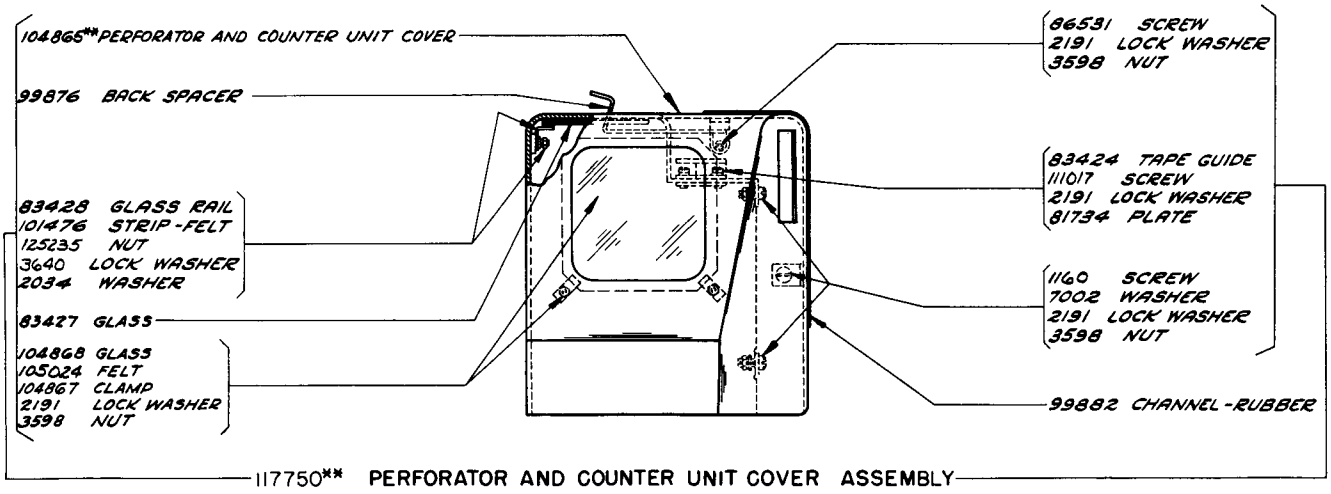

USED ONLY WHEN COUNTER UNIT IS MOUNTED ON LEFT HAND SIDE

**SEE CHART ON PAGE D FOR FINISH SUFFIX.

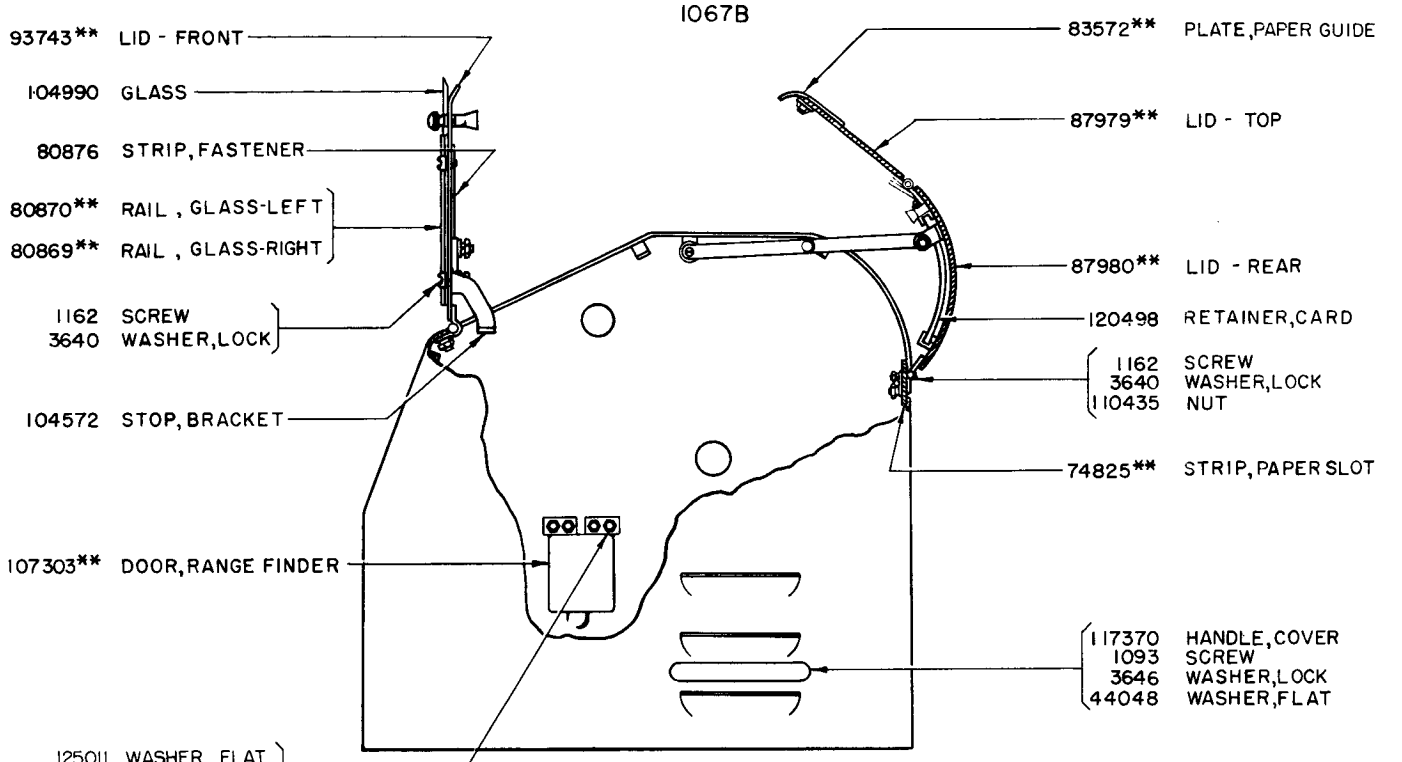

COVER (NEW STYLE)

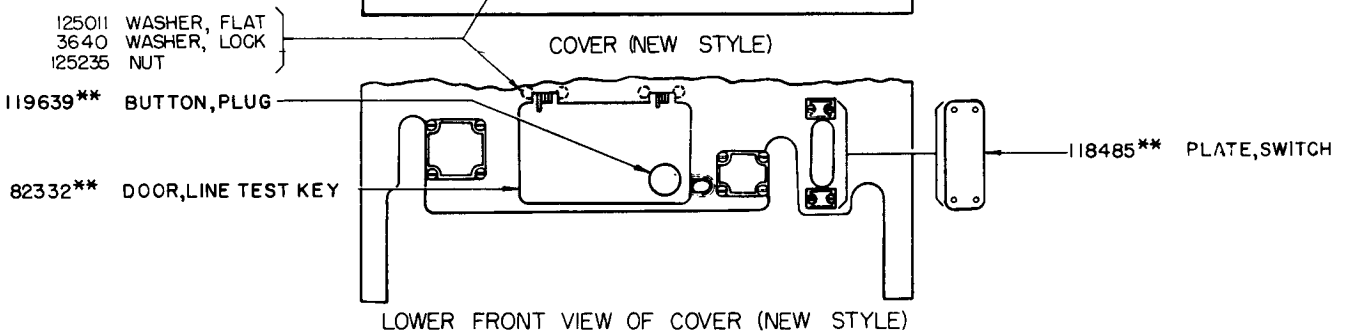

LOWER FRONT VIEW OF COVER (NEW STYLE)
(SEE PAGE 22 FOR PARTS NOT CALLED OUT)

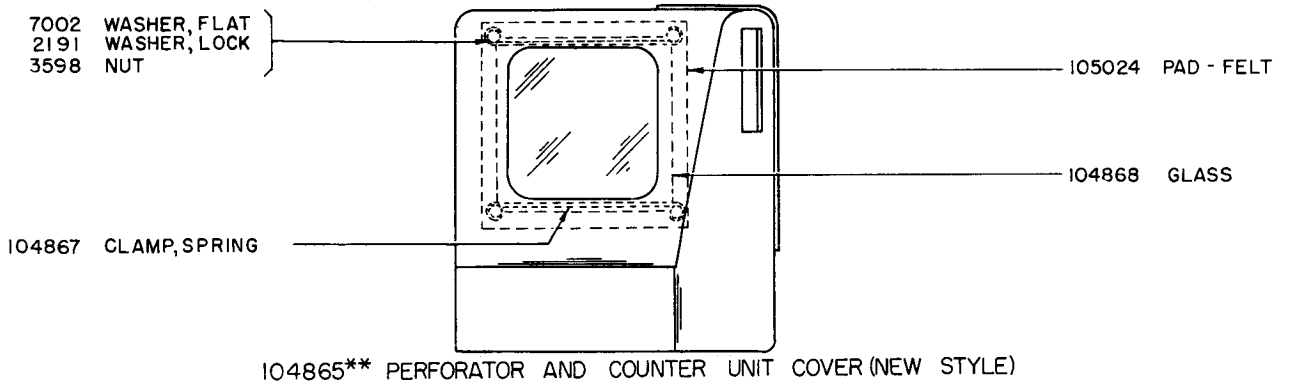

104865** PERFORATOR AND COUNTER UNIT COVER (NEW STYLE)
(SEE PAGE 23 FOR PARTS NOT CALLED OUT)

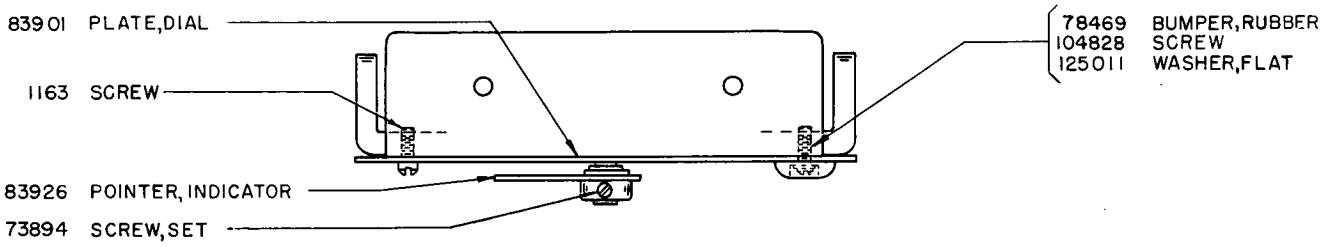

COUNTER UNIT
BOTTOM VIEW AS VIEWED FROM FRONT

**SEE CHART ON PAGE D FOR FINISH SUFFIX.

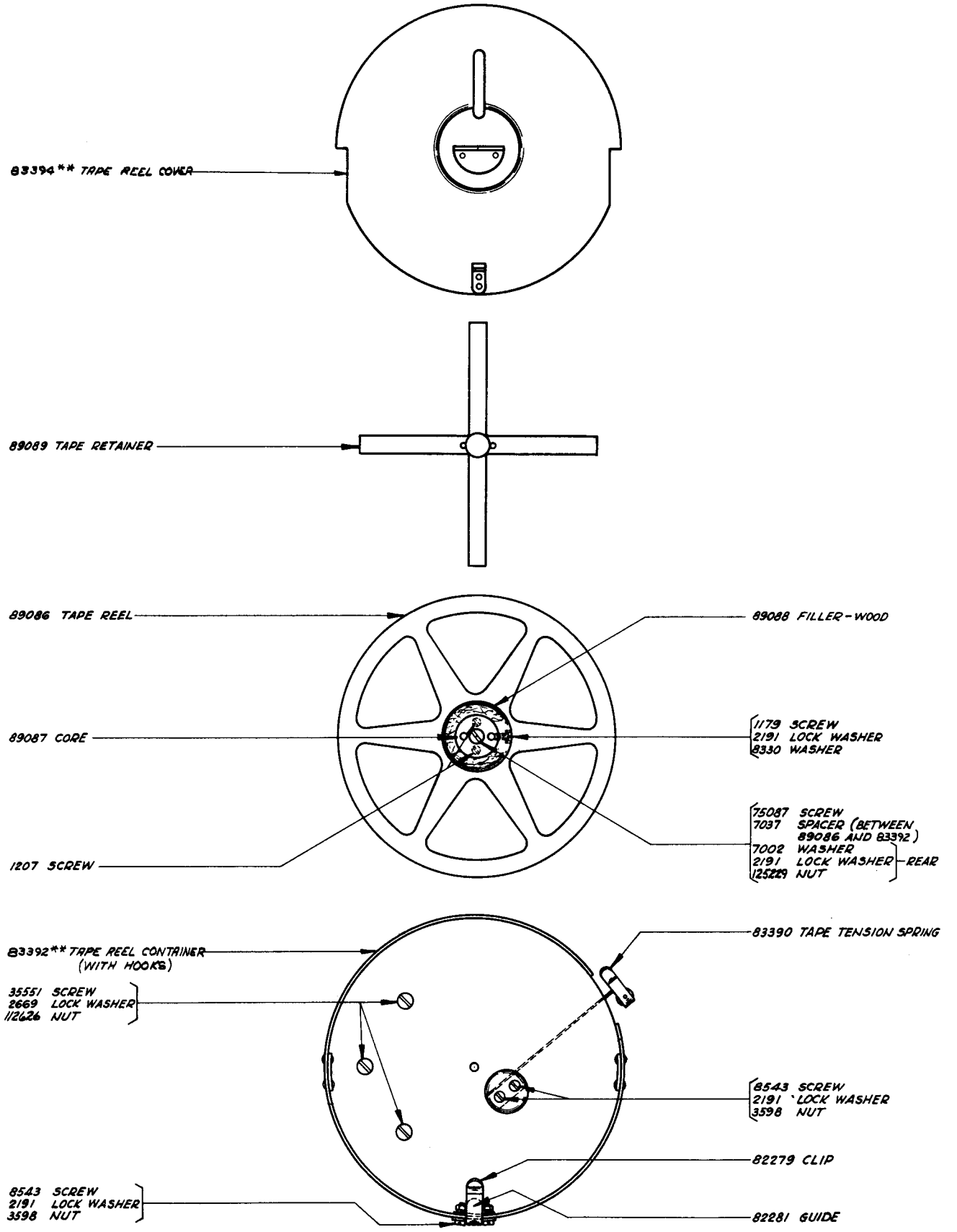

115726** TAPE REEL AND CONTAINER ASSEMBLY

**SEE CHART ON PAGE D FOR FINISH SUFFIX.

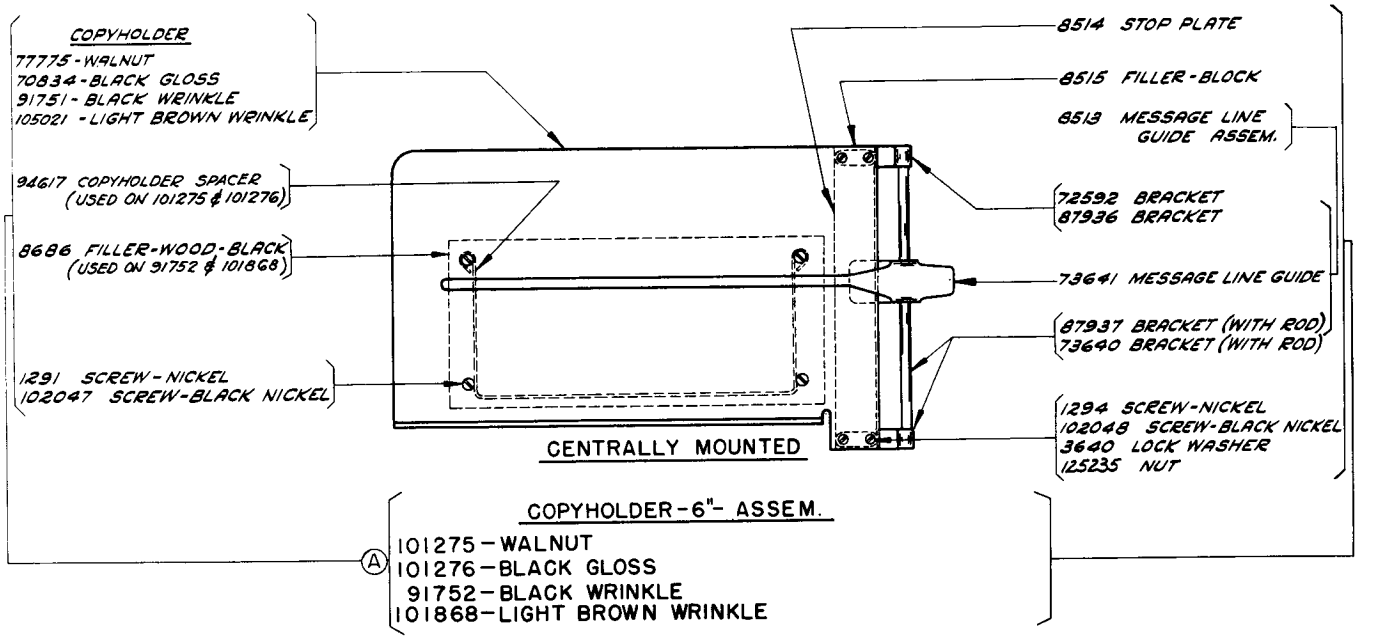

(OLD STYLE)

(A) NO LONGER AVAILABLE: THE OLD STYLE COPYHOLDER PLATE IS NO LONGER AVAILABLE. WHEN IT BECOMES NECESSARY TO REPLACE AN OLD STYLE COPYHOLDER PLATE, A NEW STYLE COPYHOLDER PLATE, SHOWN ON PAGE 27, ALONG WITH ONE 110920 ROD, ONE 2191 LOCK WASHER AND ONE 3598 NUT SHOULD BE ORDERED INSTEAD.

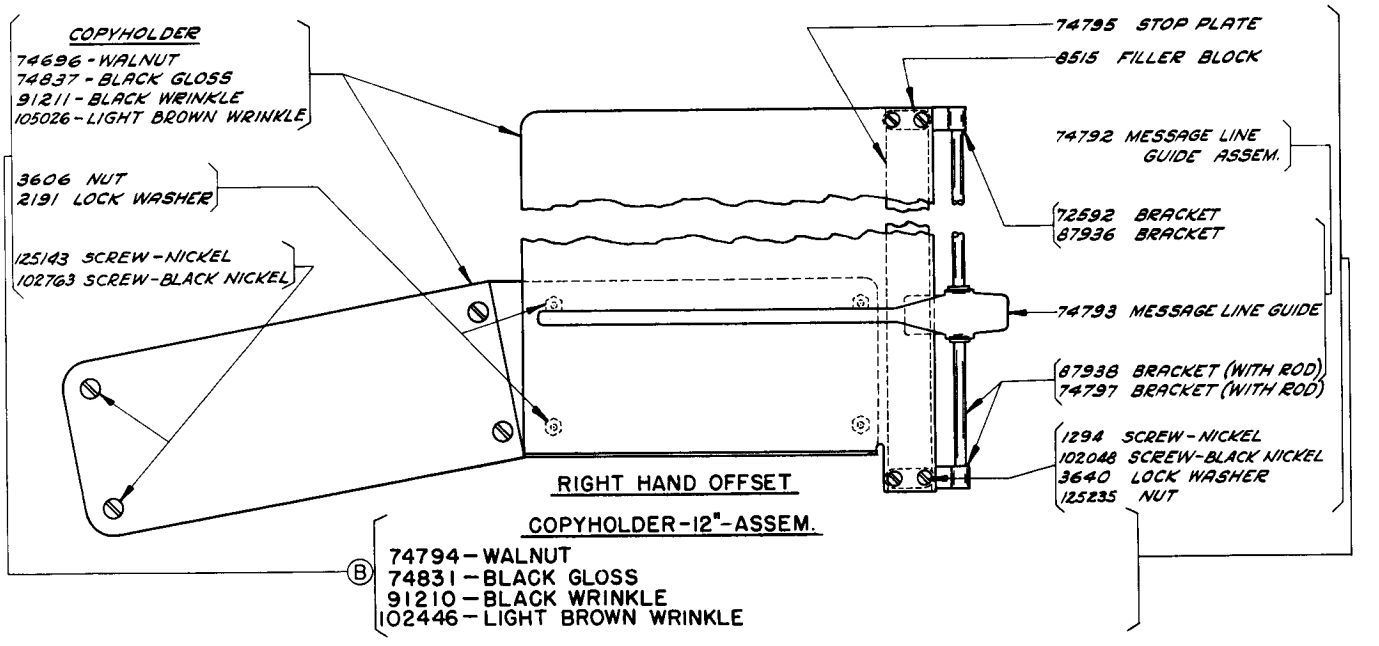

(OLD STYLE)

(B) NO LONGER AVAILABLE: THE OLD STYLE COPYHOLDER PLATE (WITH EXTENSION) IS NO LONGER AVAILABLE. WHEN IT BECOMES NECESSARY TO REPLACE AN OLD STYLE COPYHOLDER PLATE (WITH EXTENSION), A COMPLETE NEW STYLE 12" COPYHOLDER (WITH EXTENSION), SHOWN ON PAGE 27, SHOULD BE ORDERED INSTEAD.

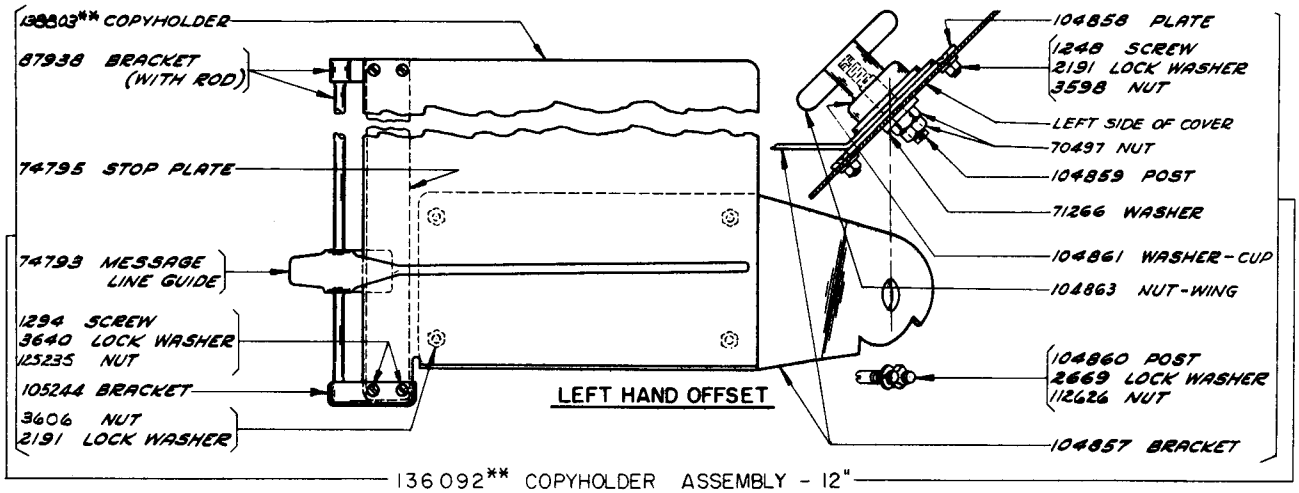

136092** COPYHOLDER ASSEMBLY - 12"

(BELL SYSTEM 15E**)

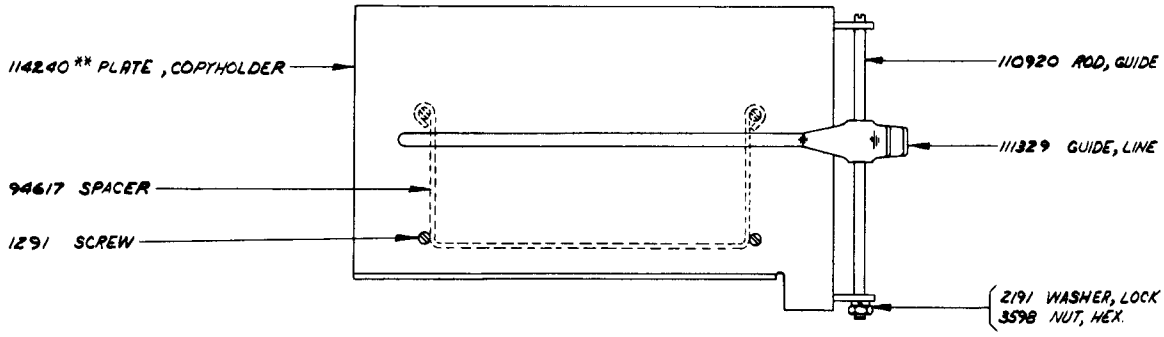

115700** COPYHOLDER ASSEMBLY - 6" (NEW STYLE)

(BELL SYSTEM 14A**)

SEE PAGE 26 FOR OLD STYLE

**SEE CHART ON PAGE D FOR FINISH SUFFIX

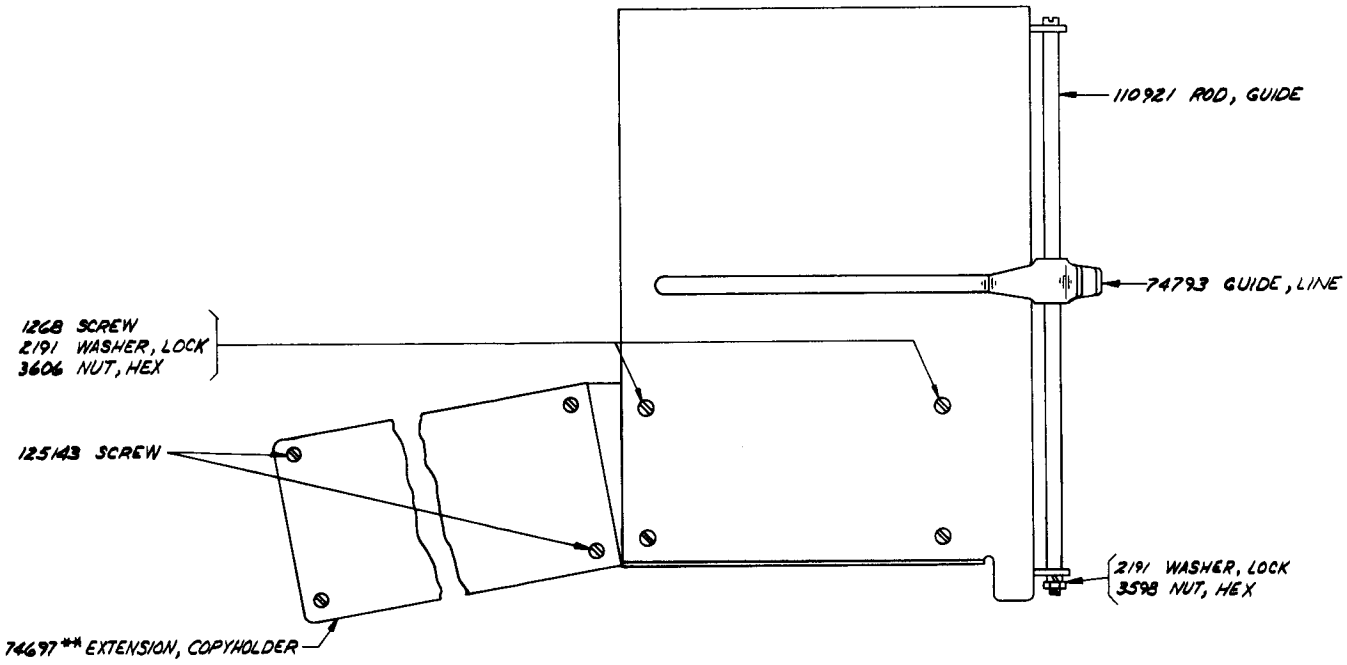

115709** COPYHOLDER ASSEMBLY - 12" (NEW STYLE)

(BELL SYSTEM 15A**)

SEE PAGE 26 FOR OLD STYLE

**SEE CHART ON PAGE D FOR FINISH SUFFIX

KEYTOPS

KIND OF KEYTOPS	SPRING CUSHION			PNEUMATIC (NO LONGER AVAILABLE)			CELLULOID		
SET NUMBERS	78932	78936	82859	8176	72703	82500	88651	75851	86664
BELL SYSTEM ARRANGEMENTS	"A"	"B"	"C"	"A"	"B"	"C"	"A"	"B"	"C"
DESCRIPTION	COMPONENT PART NUMBERS			COMPONENT PART NUMBERS			COMPONENT PART NUMBERS		
A -	78946	78946	78946	3054	3054	3054	72031	72031	72031
B ?	78947			3055			72032		
B 5/8		78986	78986		72705	72705		75657	75657
C :	78948			3056			72033		
C 1/8		78984	78984		71995	71995		75655	75655
D $	78949	78949	78949	3057	3057	3057	72034	72034	72034
E 3	78950	78950	78950	3058	3058	3058	72035	72035	72035
F !	78951			3059			72826		
F 1/4		78982	78982		71053	71053		75652	75652
G &	78952	78952	78952	3060	3060	3060	72037	72037	72037
H £	78953			3061			72038		
H #		78981			8255			75852	
H STOP			82607			82274			86630
I 8	78954	78954	78954	3062	3062	3062	72039	72039	72039
J '	78955	78955		3063	3063		72827	72827	
J ,			78993			75691			86631
K (	78956			3064			72041		
K 1/2		78988	78988		72707	72707		75653	75653
L)	78957			3065			72042		
L 3/4		78983	78983		71057	71057		75654	75654
M .	78958	78958	78958	3066	3066	3066	72824	72824	72824
N ,	78959			3067			72830		
N 7/8		78987	78987		72706	72706		75658	75658
O 9	78960	78960	78960	3068	3068	3068	72045	72045	72045
P 0	78961	78961	78961	3069	3069	3069	72046	72046	72046
Q 1	78962	78962	78962	3070	3070	3070	72047	72047	72047
R 4	78963	78963	78963	3071	3071	3071	72048	72048	72048
S BELL	78980	78980	78980	8177	8177	8177	72825	72825	72825
T 5	78964	78964	78964	3073	3073	3073	72050	72050	72050
U 7	78965	78965	78965	3074	3074	3074	72051	72051	72051
V ;	78966			3075			72052		
V 3/8		78985	78985		72704	72704		75656	75656
W 2	78967	78967	78967	3076	3076	3076	72053	72053	72053
X /	78968	78968	78968	3077	3077	3077	72054	72054	72054
Y 6	78969	78969	78969	3078	3078	3078	72055	72055	72055
Z "	78970	78970	78970	3079	3079	3079	72056	72056	72056
LTRS	78973	78973	78973	3082	3082	3082	72058	72058	72058
FIGS	78972	78972	78972	3081	3081	3081	72057	72057	72057
CAR RET	78976	78976	78976	3573	3573	3573	73151	73151	73151
LINE FEED	78978	78978	78978	3578	3578	3578	73152	73152	73152
BLANK	78971	78971	78971	3080	3080	3080	72061	72061	72061

(A) WHEN REPLACING A CELLULOID KEYTOP, IT IS NECESSARY TO REMOVE THE 55080 BEZEL (SEE PAGE 1), WHICH IN MANY CASES BECOMES DAMAGED. IT IS, THEREFORE, RECOMMENDED THAT FOR EACH CELLULOID KEYTOP ORDERED, A 55080 BEZEL SHOULD ALSO BE ORDERED.

NOTE: SEE BULLETIN 1164B FOR ADDITIONAL KEYTOPS.

CABLES

Part Number	Description	Wiring Diagram Number
83443	COUNTER (MOUNTED ON RIGHT)	W.D. - 1424, 1513, 1616, 1627, 1711, 1779, 1782, 2392
83895	RESISTOR (RESISTANCE CABLE FOR 110 VOLT OPERATION)	W.D. - 1424, 1616, 1627, 1782, 1986, 1995, 2143, 2269, 2336, 2377, 2392, 2422
84527	KEYBOARD (WITH BREAK KEY)	W.D. - 1616, 1782, 2392
84554	PERFORATOR (WITH COUNTER CONTROL CONTACTS MOUNTED ON PERFORATOR UNIT)	W.D. - 1424, 1513, 1616
87385	RESISTOR STRAP (220 VOLT OPERATION)	W.D. - 1513, 1779
87386	COUNTER RESISTOR (220 VOLT OPERATION)	W.D. - 1513, 1779
91576	PERFORATOR (WITH COUNTER CONTROL CONTACTS MOUNTED ON PERFORATOR UNIT)	W.D. - 1627, 1711, 1779, 1782
99881	PERFORATOR AND COUNTER (MOUNTED ON LEFT)	W.D. - 1995, 2696
104936	KEYBOARD (WITH LINE TEST KEY)	W.D. - 1424, 1513, 1627, 1711, 1779, 1986, 1995, 2143, 2336, 2377, 2696

PERF
TRANSMITTER

120451 IDENTIFICATION PLATE (BELL SYSTEM)

Use two 93597 screws to secure the plate.

MODIFICATION KITS FOR THE MODEL 15 PERFORATOR TRANSMITTER

86192 set of parts for converting Bell System keytop arrangement "C" to "B" (for use on 15-B perforator transmitter) consists of the following parts:

78955	Spring Cushion Keytop (J ')	1
78971	Spring Cushion Keytop (Blank)	1
78981	Spring Cushion Keytop (H #)	1
91290	Name Plate (15-B Keyboard)	1

86193 set of parts for converting Bell System keytop arrangement "C" to "A" (for use on 15-A perforator transmitter) consists of the following parts:

78947	Spring Cushion Keytop (B ?)	1
78948	Spring Cushion Keytop (C :)	1
78951	Spring Cushion Keytop (F I)	1
78953	Spring Cushion Keytop (H)	1
78955	Spring Cushion Keytop (J ')	1
78956	Spring Cushion Keytop (K ( )	1
78957	Spring Cushion Keytop (L))	1
78959	Spring Cushion Keytop (N,)	1
78966	Spring Cushion Keytop (V ;)	1
78971	Spring Cushion Keytop (Blank)	1
91289	Name Plate (15-A Keyboard)	1

89069 set of parts, to hold universal bar depressed, consists of the following parts:
(Refer to Spec. 5088S for installation instructions)

89073	Extension	1
80444	Screw	1
2191	Lock Washer	1
89070	Cutout Lever	1
89071	Bushing	1
7002	Washer	1
1026	Screw	1
89074	Stud-Eccentric	1
2191	Lock Washer	1
3598	Nut	1
89072	Spring	1
1163	Screw	1
3640	Lock Washer	1

91624 set of parts, to apply improved counter control mechanism, consists of the following parts:
(Refer to Spec. 5088S for installation instructions)

91540	Counter Control Unit	1
74986	Screw	2
7002	Washer	2
2191	Lock Washer	2
91565	Shims	24
91571	Counter Control Contacts Assem.	1
7002	Washer	2
2191	Lock Washer	2
1038	Screw	2
91575	Cover	1
125011	Washer	2
3640	Lock Washer	2
110435	Nut	2
85376	Key Lever Spring	4
91554	Universal Bar	1
91576	Cable	1
75646	Drive Screw	4

MODIFICATION KITS (Continued)

91625 set of parts to apply lower punch operating contacts and adjustable key pressure mechanism, consists of the following parts:
(Refer to Spec. 5088S for installation instructions)

91550	Contact Operating Lever	1
91570	Punch Contact Assem.	1
91564	Armature	1
91543	Bracket	1
81564	Adjusting Screw	1
3598	Nut	1
2191	Lock Washer	1
91544	Spring Adjusting Lever	1
91548	Bushing	1
85976	Spacer	1
1269	Screw	1
3598	Nut	1
2191	Lock Washer	1
91545	Extension	1
8543	Screw	1
7002	Washer	1
2191	Lock Washer	1
91577	Spring	1
91547	Bracket	1
91546	Adjusting Screw	1
1169	Screw	1
3598	Nut	1
1161	Screw	2
2191	Lock Washer	2

91626 set of parts to apply two-piece armature lever and follow-through feature, consists of the following parts:
(Refer to Spec. 5088S for installation instructions)

89498	Armature Lever	1
89499	Selector Finger Guide	1
8543	Screw	4
2191	Lock Washer	4
89500	Punch - Small	1
83362	Bearing Bracket	1
91558	Selector Lever Guide	1
1159	Screw	2
125011	Washer	2
3640	Lock Washer	2
91559	Feed Punch Selector Lever	1
84592	Shims	5
83923	Bracket	1

91627 set of parts to apply space mechanism with centrally located spacer key lever, consists of the following parts:
(Refer to Spec. 5088S for installation instructions)

88995	Post	2
7002	Washer	2
89493	Spacer Bar Loop	1
89496	Shaft	1
6746	Screw	2
2191	Lock Washer	2
91003	Repeat Space Extension	1
80402	Screw	2
3640	Lock Washer	2
78075	Screw	2

MODIFICATION KITS (Continued)

(91627 continued)

2191	Lock Washer	2
89495	Spacer Bar - Short	1
89494	Spacer Key Lever	1
89330	Key Lever Spring - Spacer	1
83314	Selector Bar A-1	1
83315	Selector Bar A-2	1
83316	Selector Bar B-1	1
83317	Selector Bar B-2	1
83318	Selector Bar C-1	1
83319	Selector Bar C-2	1
83320	Selector Bar D-1	1
83321	Selector Bar D-2	1
83322	Selector Bar E-1	1
83323	Selector Bar E-2	1
83324	Selector Bar G-2	1

91631 set of parts, to apply long spacer bar to perforator transmitters equipped with space mechanism having centrally located spacer key lever, consists of the following parts:
(Refer to Spec. 5088S for installation instructions)

91001	Key Lever Spring - Spacer	1
91002	Spacer Bar - Long	1

92167 set of parts for converting Bell System keytop arrangement "C" to "B" (for use on 15-E perforator transmitter) consists of the following parts:

78955	Spring Cushion Keytop (J ')	1
78971	Spring Cushion Keytop (Blank)	1
78981	Spring Cushion Keytop (H #)	1
92165	Name Plate (15-E Perforator Transmitter)	1

92168 set of parts for converting Bell System keytop arrangement "C" to "A" (for use on 15-D perforator transmitter) consists of the following parts:

78947	Spring Cushion Keytop (B ?)	1
78948	Spring Cushion Keytop (C :)	1
78951	Spring Cushion Keytop (F I)	1
78953	Spring Cushion Keytop (H)	1
78955	Spring Cushion Keytop (J ')	1
78956	Spring Cushion Keytop (K ( )	1
78957	Spring Cushion Keytop (L))	1
78959	Spring Cushion Keytop (N ,)	1
78966	Spring Cushion Keytop (V ;)	1
78971	Spring Cushion Keytop (Blank)	1
92164	Name Plate (15-D Perforator Transmitter)	1

92231 set of spring cushion keytops - same as 82859 set of spring cushion keytops (see page 29) except does not include 78971 "blank" keytop.

92828 set of parts, to apply adjustable feed punch selector lever and selector lever guide, consists of the following parts:
(Refer to Spec. 5143S for installation instructions)

83362	Bearing Bracket	1
91559	Feed Punch Selector Lever	1
1162	Screw	1
3640	Lock Washer	1
84592	Shims	10
91558	Selector Lever Guide	1

MODIFICATION KITS (Continued)

(92828 continued)

1159	Screw	2
3640	Lock Washer	2
125011	Washer	2
83923	Bracket	1

92996 electric impulse counter assem. - with accessories (walnut), consists of the following parts:

83437	Counter Mechanism Assem.	1
83901	Dial Plate	1
1163	Screw	4
83926	Indicator	1
73894	Screw	2
83357	Counter Bracket	1
81769	Pad - Felt	1
81770	Bracket - Left	1
81771	Bracket - Right	1
6390	Screw	4
2191	Lock Washer	4
81772	Bushing - Rubber	2
1012	Screw	2
125012	Lamp Socket	1
83441	Nipple	1
125404	Lamp - Red (110 Volt)	1
83378	Shield	1
8543	Screw	2
7002	Washer	2
2191	Lock Washer	2
83438	Counter Cover Assem.	1
1169	Screw	2
2191	Lock Washer	2
83375	Counter Casting	1
1223	Screw	2
3438	Washer	2
2382	Lock Washer	2
83443	Cable	1
83442	Cable Clamp - Long	1
89354	Strap	1
1268	Screw	2
1245	Screw	2
2382	Lock Washer	2

94494 set of parts to reduce friction of the repeat space rod cutout, consists of the following parts:
(Refer to Spec. 5175S for installation instructions)

94086	Spacing Rod Bracket	1
125139	Screw	1
94087	Extension	1
94088	Spacing Rod	1

99037 set of parts to provide improved operating margins for the punch unit, consists of the following parts:
(Refer to Spec. 5172S for installation instructions)

97635	Armature Lever	1
97641	Armature	1
84082	Screw	2
97632	Bracket	1
8543	Screw	2
2191	Lock Washer	2
97639	Spring Post	1
73946	Thumb Nut	1

MODIFICATION KITS (Continued)

(99037 continued)

3598	Nut	1
74700	Spring	1
97633	Feed Pawl Lever	1
1215	Screw	1
3598	Nut	1
2191	Lock Washer	1
97634	Feed Pawl	1
97637	Eccentric	1
86774	Screw	1
97631	Adjusting Bracket	1
7001	Washer	1
98722	Screw	1
3640	Lock Washer	1
3599	Nut	1
1179	Screw	1
97638	Guide	1
8543	Screw	2
7002	Washer	2
2191	Lock Washer	2
99985	Tape Stripper Plate	1
97643	Backspace Lever	1
97640	Spring Post	1
45104	Spring	1
97642	Leather Bumper	1
1028	Screw	1
90951	Lock Washer	1
99987	Retaining Bracket	1
1159	Screw	2
3640	Lock Washer	2
125011	Washer	2
85936	Post	1
8543	Screw	1
2191	Lock Washer	1
7002	Washer	1
103531	Insulator	1
103511	Screw	1
70314	Washer	2
78469	Foot-Rubber	1
1169	Screw	1

99879 set of parts to convert a type C-123 cover to a type C-136 cover for use when a type PEX-20 perforator transmitter.
(Refer to Spec. 5282S for installation instructions)

99873	Cover	1
99882	Channel-Rubber	1

99880 set of parts to convert a type PEX-14 perforator transmitter to a type PEX-20.
(Refer to Spec. 5271S for installation instructions)

97635	Armature Lever	1
97641	Armature Assem.	1
84082	Screw	2
97632	Bracket	1
8543	Screw	2
2191	Lock Washer	2
97639	Spring Post	1
73946	Thumb Nut	1
3598	Nut	1
74700	Spring	1
97633	Feed Pawl Lever	1

MODIFICATION KITS (Continued)

(99880 continued)	1215	Shoulder	1
	3598	Nut	1
	2191	Lock Washer	1
	97634	Feed Pawl	1
	97637	Feed Pawl Eccentric	1
	86774	Screw	1
	97631	Feed Pawl Adjusting Bracket	1
	7001	Washer	1
	1206	Screw	1
	3640	Lock Washer	1
	3599	Nut	1
	1179	Screw	1
	97638	Feed Pawl Guide	1
	8543	Screw	2
	7002	Washer	2
	2191	Lock Washer	2
	99985	Tape Stripper Plate	1
	97643	Backspace Lever	1
	97640	Shoulder Screw Spring Post	1
	45104	Spring	1
	97642	Leather Bumper (Thin)	1
	1028	Screw	1
	90951	Lock Washer	1
	99871	Counter Bracket	1
	6811	Screw	2
	2191	Lock Washer	2
	90421	Spacer	2
	99872	Counter Lamp Bracket	1
	80444	Screw	2
	2191	Lock Washer	2
	6810	Screw	2
	2669	Lock Washer	2
	99878	Clamp Bushing	2
	99881	Cable Comp.	1
	94248	Cable Clamp	1
	92204	Cable Clamp	1
	1187	Screw	1
	2669	Lock Washer	1
	99987	Retainer Bracket	1
	1159	Screw	2
	3640	Lock Washer	2
	125011	Washer	2
	99988	Connecting Link Extension Assem.	1
	99989	Connecting Link Extension Assem.	1
	125215	Screw	2
	90951	Lock Washer	2
	55005-C	Washer	2
	94086	Bracket Assem.	1
	125139	Screw	1
	94087	Repeat Space Cutout Extension	1
	94088	Repeat Space Rod	1
	103386	Terminal Guard	1
	46042	Spacer	1
	1168	Screw	1
	1163	Screw	2
	3640	Lock Washer	3

MODIFICATION KITS (Continued)

102896 set of parts to equip a perforator transmitter with positive action perforating feature, consists of the following parts:
(Refer to Spec. 5134S for installation instructions)

102883	Punch Contact and Latch Assem.	1
102890	Armature	1
102892	Screw - Adjusting	2
3606	Nut	2
2191	Lock Washer	2
102893	Spring Plate	1
7614	Spring	1
102894	Spring Plate	1
110437	Spring	1
102895	Operating Lever	1
2623	Spring	1
99988	Link Extension Assem.	1
99989	Link Extension Assem.	1
125215	Screw	2
55005-C	Washer	2
90951	Lock Washer	2
102244	Name Plate (15-J Perforator Transmitter)	1
102245	Name Plate (15-K Perforator Transmitter)	1
102246	Name Plate (15-L Perforator Transmitter)	1

112008 set of parts to provide rapid feed-out of tape on Perforator-Transmitter
(Refer to Spec. 5540S for installation instructions)

125124	Screw (4-40 shoulder)	1
110435	Nut	1
1025	Stud, Eccentric	1
1026	Screw (6-40 x 9/32 Fil)	2
1051	Screw (4-40 x 1/2 Fil)	1
1176	Screw (6-40 x 3/16 Fil)	1
2191	Washer, Lock	4
3598	Nut	1
3599	Nut	1
3606	Nut	2
3640	Washer, Lock	2
2605	Spring	1
13681	Spacer	1
76692	Screw (6-40 Shoulder)	1
80342	Screw (6-40 x 23/64 Hex)	2
82249	Shim	7
85932	Keytop	1
86079	Washer, Felt	2
97393	Screw (6-40 Shoulder)	1
100106	Screw (4-40 Shoulder, Eccentric)	1
109152	Screw (4-40 x 11/64 Fil)	1
112009	Bracket	1
112011	Extension, Keylever	1
112012	Keylever Assembly including: 72539 Disc 1	
112069	Cable	1
112105	Guard, Contact	1
112106	Spacer	1
112108	Bracket	1
112116	Lever, Detent	1
112117	Lever	1

MODIFICATION KITS (Continued)

112118	Plate	1	
112503	Contact Assembly Consisting of:	1	
	1051	Screw (4-40 x 1/2 Fil)	2
	41732	Plate	1
	41733	Insulator, Bakelite	3
	81726	Terminal	2
	82547	Insulator, Bakelite	1
	86955	Spring Assembly, Contact (short)	1
	86959	Bushing, Bakelite	2
	112010	Bracket	1
	112505	Spring Assembly, Contact (long)	1
112504	Contact Assembly consisting of:	1	
	1051	Screw	2
	41732	Plate	1
	41733	Insulator, Bakelite	4
	76790	Bushing, Bakelite	2
	80334	Terminal	2
	100419	Stiffener	1
	112013	Bracket	1
	112111	Spring Assembly, Contact (long)	1
	112112	Spring Assembly, Contact (short)	1

112570 set of parts to provide a cam pulsing contact assembly on perforator transmitter keyboards for 100 w.p.m. operation.

(Refer to Spec. 5555S for installation instructions)

84911	Contact Bracket	1
112578	Backstop Plate	1
1162	Screw	2
3640	Lock Washer	2
81564	Screw	1
2191	Lock Washer	1
3606	Nut	1
41732	Plate	1
41733	Insulator	3
80334	Terminal	2
112572	Contact Spring-with points	1
105940	Contact Stiffener	2
112571	Contact Spring	1
112128	Cam Follower Retainer	1
112129	Cam Follower	1
112127	Cam Follower Hinge	1
82547	Insulator	1
82444	Bushing-Bakelite	2
74952	Screw	2

112595 set of parts to provide operation of perforator transmitters at 100 w.p.m. (7.42 unit transmission)

(Refer to Spec. 5510S for installation instructions)

111731	Cam Sleeve Assembly	1
112588	Contact Mounting Assembly	1
112498	Screw	2
112570	Cam Pulsing Contact Assembly	1

122264 set of parts to provide a repeat-character feature for the Model 15 perforator transmitter.

(Refer to Spec. 5678S for installation instructions)

122266	Lever, Repeat	1
122267	Bracket, Repeat Lever	1
122268	Extension, Repeat Lever	1

MODIFICATION KITS (Continued)

122269	Extension, Repeat Space	1
122265	Nut	1
2191	Washer, Lock	3
6345	Nut	1
8543	Screw	2
74986	Screw	2
75087	Screw, Shoulder	1
123594	Spring, Torsion	1

136141 set of parts to equip a Model 19 set with fan fold tape container.
(Refer to Spec. 5903S for installation instructions)

2191	Lock Washer	2
3598	Nut	2
139760	Spacing Block	1
139762	Tape Tension Spring	1
139763**	Front Plate	1
139764**	Tape Container	1
151637	Screw	4
151657	Screw	2

136128 set of parts to equip a Model 15 perforator transmitter for blinding selector magnets.
(Refer to Spec. 5874S for installation instructions)

1050	Screw (6-40 x 7/32)	2
1162	Screw (4-40 x 1/4)	2
2191	Lock Washer	2
3599	Nut	4
3640	Lock Washer	4
27425	Screw (2-56 x 5/32)	2
90791	Lock Washer	2
93112	Screw (4-40 x 7/8)	2
98869	Spacer	2
104691	Contact Assembly	1
104692	Contact Operating Arm	1
104693	Lock Loop	1
104694	Receptacle and Cable Assembly	1
104695	Receptacle Bracket	1
104802	Adapter Bracket	1

NUMERICAL INDEX

Part Number	Description and Page Number
191M	Magnet - 19 Ohms 12
194M	Magnet - 500 Ohms 19
200M	Magnet - 76 Ohms 12
1012	Screw (6-40 Shoulder) 20, 34
1025	Stud 37
1026	Screw (6-40 x 3/8) 7,11,13,15,16,31,37
1028	Screw (4-40 x 1/4) 12,13,14,16,18,35,36
1030	Screw (6-40 Shoulder) 21,23,
1038	Screw (6-40 x 9/32) 1,2,4,9,31
1046	Screw (6-40 Shoulder) 19
1050	Screw (4-40 x 1/2) 16,39
1051	Screw (4-40 x 1/2) 19,37,38
1072	Screw (6-40 Thumb) 21
1073	Screw (6-40 Thumb) 22
1093	Screw (8-32 x 7/16) 24
1159	Screw (4-40 x 3/8) 12,14,15,32,34,35
1160	Screw (6-40 x 5/16) 12,14,16,19,23
1161	Screw (6-40 x 1/4) 12,13,14,15,19,32
1162	Screw (4-40 x 1/4) 10,11,12,14,19,21,24, 33,38,39
1163	Screw (4-40 x 3/16) 1,7,9,19,20,24,31,34, 36
1168	Screw (4-40 x 5/16) 18,19,36
1169	Screw (6-40 x 7/16) 1,9,11,12,13,14,15, 16,20,32,34,35
1174	Screw (4-40 Shoulder) 11,12,14
1176	Screw (6-40 x 3/16) 10,22,37
1179	Screw (6-40 x 5/8) 15,25,35,36
1187	Screw (10-32 x 1/4) 1,3,4,12,13,15,20,36
1196	Screw (6-40 Shoulder) 12,14
1206	Screw (4-40 x 9/16) 11,13,15,16,36
1207	Screw (4-36 x 5/16 Flat Head) 25
1215	Screw (6-40 Shoulder) 14,35,36
1223	Screw (10-32 x 1/2) 20,34
1245	Screw (10-32 x 1) 4,20,34
1248	Screw (6-40 x 1/2) 27
1268	Screw (138-40 5/16) 4,6,20,28,34
1269	Screw (6-40 x 1/2) 12,13,14,15,19,32
1291	Screw (6-32 x 3/4) 26,27
1294	Screw (4-36 x 1/2) 26,27
1297	Screw (6-40 x 2-7/16) 6,18
2034	Washer 7,18,23
2191	Lock Washer 1 to 16,18 to 28, 31 to 39
2199	Nut (7/16-32 Hex) 7
2322	Lock Washer 18
2378	Spacer Key Lever 3
2382	Lock Washer 12,14,34
2407	Lock Washer 7
2410	Tape Guide Spring 13,15
2422	Lock Washer 11,13,15
2438	Washer, 12,14
2502	Mounting Strip 7
2503	Cover Plate 7
2504	Insulator 7
2526	Collar 7
2529	Bushing - Bakelite 7
2565	Key Lever Spring 1
2605	Spring 37
2623	Spring 7,12,14,37
2663	Buffer - Rubber 1,4
2669	Lock Washer, 1,3,4,9,12,13,14,15,20,22, 25,27,36
2836	Spring 11
2922	Nut (3/16-24 Square) 4
3438	Washer 6,9,12,14,18,20,21,34
3595	Nut (1/4-32 Hex) 18
3598	Nut (6-40 Hex) 1,4,7,12,13,14,15,21,23, 24,25,27,28,31,32,34,35,36,37,39
3599	Nut (4-40 Hex) 3,7,11 to 16,19,34,35,36, 37,39
3604	Nut (5/32-40 Hex) 12,14
3606	Nut (6-40 Hex), 1,3,16,26,27,28,36,37, 38
3639	Lock Washer 4,20
3640	Lock Washer, 1,3,7,9 to 16, 18,19,21,23, 24,26,27, 31 to 39
3646	Lock Washer 6,18,24
3650	Washer - Brass 13,16,
3778	Resistor - 20 Ohms 3
4810	Oil Wick - Felt 7,16
4881	Siffener 7
5475	Nut (3/16-40 Hex) 19
5740	Screw (2-56 x 1/4) 11,17,
6345	Nut (6-32 Hex) 22,37,39
6390	Screw (6-40 x 3/16) 20,33,34
6746	Screw (6-40 x 5/16) 1,2,3,4,6,7,9,10,11, 32
6805	Screw (6-40 Shoulder) 7
6807	Screw (6-40 x 3/16 Set) 3,12,14
6810	Screw (10-32 x 3/8) 20,22,35,36
6811	Screw (6-40 x 5/8) 7,12,14,20,35,36
6814	Screw (6-40 Pilot) 6,7
6942	Screw (4-40 x 9/32 Eccentric) 7
7001	Washer 14,34,35
7002	Washer 1,2,4,5,6,7, 9 to 13,15,16,20,21, 23,24,25, 31 to 36
7032	Pawl 7
7037	Spacer 25
7318	Contact Lever 7
7334	Post 1
7339	Cam Sleeve 7
7372	Bearing 7
7373	Bushing 7
7377	Lock Loop 7
7378	Lock Loop Roller 7
7381	Contact Mounting Assembly 7
7382	Bracket - Front 7
7383	Oiler 7
7385	Bracket - Rear 7
7386	Post 7
7387	Brace 7
7389	Clutch - Driving 7
7391	Clutch - Driven
7409	Clutch Lever 7
7482	Key Lever 1
7614	Spring 36,37
7618	Spring 19
7965	Spring 12,13,14,15
8097	Cam Sleeve 7
8254	Cable Clamp 1
8330	Washer 1,14,19,25
8449	Collar 3
8513	Message Line Guide Assembly 26
8514	Stop Plate 26

NUMERICAL INDEX (Continued)

Part Number	Description and Page Number
8515	Filler Block 26
8539	Screw (6-40 x 1/2) 4,5,7,8,10,13,15,18
8543	Screw (6-40 x 1/4) 1,5,12,13,14,15,16, 20,25,32,33,34,35,36,37
8686	Filler - Wood 26
8896	Shim 7
8990	Pad Retainer 21
9177	Contact Stop 7
9178	Contact Spring 7
9182	Shaft 7
9209	Key Lever 1
9210	Key Lever 1
13681	Spring Post 12
35551	Screw (10-32 x 3/8) 25
36273	Washer 1,7
41663	Washer 7,8,10
41720	Contact Spring 8
41732	Clamp Plate 8,9,11,13,15,16,19,36,37,38
41733	Insulator 8,9,11,13,14,15,16,19,36,37,38
45104	Spring 14,35,36
46042	Spacer 19,36
55005C	Washer 14,35,36
55080	Bezel 1,
70314	Washer 4,16,19,35,37
70319	Upstop - Leather 4
70324	Bearing 1
70497	Nut (5/16-32 Hex) 27
70529	Stiffener 19
70834	Copyholder 26
71073	Washer 11
71161	Bushing 7
71266	Washer 27
72031 thru 72035	Keytop 29
72037 thru 72039	Keytop 29
72041	Keytop 29
72042	Keytop 29
72045 thru 72048	Keytop 29
72050 thru 72058	Keytop 29
72061	Keytop 29
72472	Shim 1
72501	Shaft 1
72539	Disk 36
72592	Bracket 26
72635	Shim 19
72643	Screw (6-40 x .375 Shoulder) 3
72824 thru 72827	Keytop 29
72830	Keytop 29
72983	Key Lever 1
72984	Key Lever 1
73151	Keytop 29
73152	Keytop 29
73482	Stud 13,15
73640	Bracket (w/Rod) 26
73894	Screw (6-40 x 1/8 Set) 19,20,24,34
73946	Nut (6-40 Thumb) 14,34,35
74001	Shaft 7
74014	Screw (10-32 x 3/4) 12,14
74059	Screw (6-40 x 7/32) 10
74064	Gear - 26 T 7
74525	Screw (1/4-32 Thumb) 1
74529	Bracket 1,2
74569	Terminal Block 1
74589	Terminal Block Assembly 1
74594	Retaining Ring 1
74595	Gear - 24 T 7
74613	Screw (4-40 x 1/4) 7,19
74635	Fastening Strip 22
74637	Spring - Door 21
74638	Glass 22
74673	Tearing Edge 22
74674	Nut (6-40 Special) 22
74691	Resistor - 1600 Ohms 6
74692	Spring Post 12,14
74696	Copyholder 26
74697**	Copyholder Extension 28
74700	Spring 14,35
74751	Trip-off Pawl 1
74759	Strip-Felt 21
74762	Key Lever 1
74792	Message Line Guide Assembly 26
74793	Message Line Guide 26,27,28
74794	Copyholder Assembly 26
74795	Stop Plate 26,27
74797	Bracket (with Rod) 26
74798	Screw (6-40 x 31/64) 9,11
74805	Screw (10-32 x 3/4) 4,13,15
74808	Bushing 7
74825**	Paper Slot Strip 21,24
74831	Copyholder Assembly 26
74837	Copyholder 26
74891	Shim 1,7
74892	Shim 1
74894	Name Plate 22
74917	Pad Retainer 21
74952	Screw (4-40 x 5/8) 8,11,38
74964	Contact Spring 19
74965	Bushing - Bakelite 11,16
74986	Screw (6-40 x 13/32) 1,6,39
75087	Screw (6-32 Shoulder) 25,39
75120	Wearing Strip 17
75121	Shedder 17
75437	Line Test Key 1,2
75477	Resistor - 350 Ohms 3
75606	Spring 7
75607	Washer 7
75646	Drive Screw 31
75652 thru 75658	Key top
75750	Washer - Bakelite 6
75851	Set of Keytops 29
75852	Keytop 29
76099	Washer 12,14,21
76117	Terminal Block Assembly 13,16

NUMERICAL INDEX (Continued)

Part Number	Description and Page Number
76246	Bushing - Bakelite 11,13,15
76382	Contact Spring 8
76461	Washer 21
76692	Bushing - Bakelite 19, 38
76800	Spring 11
77040	Contact Spring 19
77362	Resistor - 350 Ohms 9
77698	Bolt 4
77775	Copyholder 26
77876	Post 1
77983	Feed Punch - Small 17
77984	Guide Plate 17
77986	Wearing Strip 17
78011	Condenser - 1 M.F. 4
78075	Screw (6-40 Shoulder) 1,32
78281	Name Plate (Brass) 22
78469	Foot - Rubber 16,19,20,24,35
78550	"Y" Lever Guide 5
78551	Shaft 5
78552	Retainer 5
78553	Selector Bar Guide 5
78596	Washer - Spring 7
78713	Frame Assembly 19
78720	Ratchet 19
78723	Eccentric 19
78724	Feed Pawl 19
78725	Latch Pawl 19
78726	Release Latch 19
78727	Latch Bracket 19
78728	Bracket 19
78729	Armature 19
78732	Feed Pawl Bracket 19
78733	Release Lever 19
78734	Contact Cam 19
78735	Contact Lever 19
78736	Bracket 19
78740	Spring 19
78741	Spring 19
78742	Clamp 19
78743	Dashpot Cylinder 19
78744	Piston 19
78745	Cap 19
78746	Screw (3/16-40 x 3/8 Special) 19
78747	Plug 19
78748	Spring 19
78755	Insulator 19
78758	Contact Assembly 19
78932	Set of Keytops 29
78936	Set of Keytops 29
78946	Keytop 29
78947	Keytop 29,31,33
78948	Keytop 29,31,33
78949	Keytop 29
78950	Keytop 29
78951	Keytop 29,31,33
78952	Keytop 29
78953	Keytop 29,31,33
78954	Keytop 29
78955	Keytop 29,31,33
78956	Keytop 29,31,33
78957	Keytop 29,31,33
78958	Keytop 29,31,33
78959	Keytop 29,31,33
78960 thru 78956	Keytop 29,31,33
78966	Keytop 29,31,33
78967	Keytop 29,31,33
78970	Keytop 29
78971	Keytop 29,31,33
78972	Keytop 29
78973	Keytop 29
78976	Keytop 29
78978	Keytop 29
78980	Keytop 29
78981	Keytop 29,31,33
78982 thru 78988	Keytop 29
78993	Keytop 29
80334	Terminal 19,36,37,38
80342	Screw (6-40 x 23/64) 1,7,37
80392	Spring 3
80402	Screw (4-40 x 15/32) 1,32
80444	Screw (6-40 x 1/4) 7,20,31,36
80471	Spring 7
80508	Screw (4-40 x 7/8) 11
80706	Set Screw 13,15
80869**	Glass Rail - Right 21,24
80870**	Glass Rail - Left 21,24
80875	Stop Arm - Rear 21
80876	Fastening Strip 21,24
80985	Screw (4-40 x 1/4) 21,22
80986	Lock Washer 21,22
81433	Shim 4,6
81501	Magnet Core 14
81514	Guide Plate 17
81515	Punch Holder, 17
81516	Armature 11
81524	Selector Finger 12,14
81530	Screw (1/4-32 Special) 18
81531	Screw (1/4-32 Special) 18
81532	Bumper - Leather 18
81553	Feed Pawl 12,13
81564	Screw (6-40 x 3/8 Special) 13,14,38
81591	Armature Lever 11
81593	Armature Shaft 13,15
81596	Screw (10-32 x 1-3/8) 12,14
81597	Bracket 13,15
81599	Eccentric 12
81601	Silencer - Felt 12,14
81603	Tape Knife 12,14
81605	Chad Chute Cover 13,14
81609	Terminal Shield 12,14
81638	Collar 13,15
81657	Shim 13,15
81717	Contact Bracket 11
81721	Contact Spring 9
81724	Contact Spring 11
81726	Terminal 8, 11,13,15,16,38
81727	Counter Control Contacts Assembly 11
81734	Clamp Plate 23
81749	Cable Clamp 1
81755	Resistor - 200 Ohms 4

NUMERICAL INDEX (Continued)

Part Number	Description and Page Number
81764	Counter Cover Glass 20
81765	Counter Cover Pad - Felt 20
81766	Counter Cover Retaining Ring 20
81769	Pad - Felt 20,34
81770	Bracket - Left 20,34
81771	Bracket - Right 20,34
81772	Bushing - Rubber 20,34
81792	Punch Block 17
81793	Guide and Die Plates 17
81796	Punch Block 17
81797	Guide and Die Plates 17
81825	Condenser - 1/100 MF 10
81836	Washer - Bakelite 7
82249	Slim 37
82279	Clip 25
82281	Guide 25
82332**	Line Test Key Door 22, 24
82392	Shim 13,15
82399	Pad - Right Side 21
82401	Pad - Lower Right 21
82402	Pad - Rear - Upper 21
82403	Pad - Front 21
82404	Retaining Spring 21
thru	
82406	
82408	Retaining Spring 21
thru	
82410	
82411	Hinge Bracket 21
82412	Hinge Bracket 21
82413	Stop Arm - Front 21
82414	Detent Knob 21
82415	Cover Detent Spring 21
82425	Glass - 6-1/4" High 21
82440	Screw (6-40 x 7/16) 1
82444	Bushing - Bakelite 8,38
82547	Insulator 8,9,16,38
82559	Busning - Bakelite 9,11
82607	Keytop 29
82626	Resistor - 20 Ohms 9
82702	Screw (6-40 x 9/32 19
82713	Screw (4-40 x 9/32 Special) 19
82720	Screw (6-40 x 1/4 Set) 19
82725	Spring 12
82726	Spring 12
82727	Spring 12,14
82728	Name Plate (Brass) 22
82729	Name Plate (Brass) 22
82769	Strap 3
82859	Set of Keytops 29
82866	Resistor - 4500 Ohms 6
82930	Contact Spring 9
83302	Key Lever Guide 1
83303	Spring Plate 4
83305	Selector Bar Bracket 5
83307	Connecting Link 5
thru	
83312	
83314	Selector Bar 5,33
thru	
83324	
83325	Selector Bar 5,33

Part Number	Description and Page Number
83326	Selector Bar 5
83330	Universal Bar 6
83332	Bracket - Left 6
83333	Bracket - Right
83334	Key Lever 1
thru	
83337	
83338	Shaft 4
83341	Spacer Bar Loop 3
83342	Slide Bar 6
83343	Spacing Rod 7
83345	Bracket 1
83346	Operating Lever 7
83348	Extension 7
83349	Detent Bracket 7
83351	Plate 9
83353	Condenser Cover 4
83354	Spacing Rod Bracket 7
83355	Washer - Fibre 4
83356	Bracket 4
83357	Counter Bracket 20,34
83361	Link Extension 12,14
83362	Bearing Bracket 12,14,32,33
83363	Selector Lever #1, 12,14
83364	Selector Lever #2 and #5, 12,14
83365	Selector Lever #3 and #4, 12,14
83366	Feed Punch Selector Lever 11
83367	Counter Contacts Operating Lever 11
83369	Insulator 3
83370	Extension 12,13,15
83372	Tape Stripper Plate 12
83374	Locking Lever 1
83375	Counter Casting 34
83376	Bearing Rod 12,14
83377	Name Plate (Brass) 22
83378	Shield 34
83379	Cover 9
83381	Shaft 3
83382	Post 3
83384	Back Space Pawl 12,14
83385	Back Space Cam 12
83386	Back Space Lever 12
83390	Tape Tension Spring 25
83392**	Tape Reel Container 25
83394**	Tape Reel Cover 25
83408	Screw (4-40 x 3/16) 1,28
83421	Pad - Left Side 21
83424	Tape Guide 23
83427	Glass 23
83428**	Glass Rail 22,23
83434	Channel - Rubber 23
83436	Bracket 23
83437	Counter Mechanism Assembly 19, 34
83438	Counter Cover Assembly 34
83441	Nipple 34
83442	Cable Clamp 20,34
83443	Cable - Counter 30,34
83537	Connecting Link "H" 5
83572**	Paper Guide Plate 21,24
83854	Insulating Cloth 4
83885	Nut (6-32 Hex) 21
83895	Cable - Resistor 30

NUMERICAL INDEX (Continued)

Part Number	Description and Page Number
83901	Dial Plate 19,20,24,34
83919	Shim 5
83921	Perforator Bracket 12,13
83922	Roller 13
83923	Bracket 13,32,34
83924	Roller Fork 13
83926	Indicator 19,20,24,34
82954	Bushing 8,9
84041	Lamp - Red 20
84053**	Perforator Unit Cover 23
84082	Screw (6-40 x 13/32) 12,13,14,15,34,35
84466	Break Key 1,2
84527	Cable - Keyboard 30
84554	Cable - Perforator 30
84575	Spring 23
84592	Shim 14,32,33
84663	Bracket 9
84665	Bushing - Bakelite 9
84674	Contact Spring 11
84675	Contact Spring 9,11
84700	Punch Contacts Operating Lever 11
84701	Contact Lever 11
84702	Contact Bracket 11
84703	Bracket 11
84757	Punch Contacts Assembly 11
84758	Spring 12,14
84763	Clamp Plate 11
84892	Stiffener 9,11
84903	Contact Spring 9
84904	Perforator Control Contacts Assembly 9
84911	Contact Bracket 7,8,38
84912	Extension - Bakelite 11
84923	Spring - Rear 8
84924	Spring - Front 8
84990	Screw (.138-40 x 1/4) 1
85098	Spacer Bar 3
85376	Key Lever Spring 1,31
85384	Bushing 12,13,14,15
85932	Keytop 37
85936	Post 16,35
85976	Spacer 12,14,32
86192	Set of Parts 31
86193	Set of Parts 31
86468	Screw (1/4-32 Special) 18
86531	Screw (6-40 Shoulder) 23
86630	Keytop 29
86631	Keytop 29
86634	Stiffener 8
86664	Set of Keytops 29
86774	Screw (6-40 Shoulder) 14,35,36
86865	Chad Chite 13,15
86919	Lock Plate 12,14
86920	Star Wheel 12,14
86955	Contact Spring Assembly 38
86959	Bushing 38
87385	Strap - 4" Long 4,30
87386	Cable - Counter Resistor 30
87387	Resistor Bracket 18
87388	Resistor Guard 18
87477	Resistor - 1000 Ohms 18
87636	Screw (2-56 x 3/16) 22
87936	Bracket 26
87937	Bracket (With Rod) 26
87938	Bracket (With Rod) 26
87979**	Lid-Top 24
87980**	Lid-Rear 24
88651	Set of Keytops 29
88876	Lacing - Brown 21,22
88877	Lacing - Black 21,22
88995	Post 1,32
89069	Set of Parts to Hold Universal Bar Depressed 31
89070	Cut-out Lever 7,31
89071	Bushing 7,31
89072	Spring 1,31
89073	Extension 7,31
89074	Stud - Eccentric 7,31
89086	Tape Reel 25
89087	Core 25
89088	Filler - Wood 25
89089	Tape Retainer 25
89330	Spring 1,33
89354	Strap 4,20,34
89486	Stiffener 11
89492	Screw (1/4-32 Special) 18
89493	Spacer Bar Loop 1,32
89494	Spacer Key Lever 1,33
89495	Spacer Bar - Short 1,33
89496	Shaft 1,32
89497	Extension - Bakelite 11
89498	Armature Lever 12,13,32
89499	Selector Finger Guide 13,14,32
89500	Feed Punch - Small 17,32
89504	Punch Block 17
89535	Foot - Felt 22
89896	Oil Cup 7
89897	Nut (10-32 Hex) 7
89917	Screw (4-40 Eccentric) 7
89963	Eccentric 12,14
89969	Washer - Bakelite 18
89974	Cam Pulsing Contacts Assembly 8
90177	Punch Contacts Assembly 11
90260	Spring 7
90421	Spacer - Rear 20,35
90438	Button - Felt 7
90791	Lock Washer 39
90951	Lock Washer 14,18,19,35,36,37
91001	Spring 1,33
91002	Spacer Bar - Long 1,33
91003	Repeat Space Extension 1,32
91114	Punch Block (Assem.) - Advanced Feed 17
91120	Spring 1,7
91205	Detent Assembly 12,14
91210	Copyholder Assembly 26
91211	Copyholder 26
91289	Name Plate 31
91290	Name Plate 31
91540	Counter Control Unit 6,31
91540	Bracket 12,14,32
91544	Spring Adjusting Lever 12,14,32
91545	Extension 10,12,14,32
91546	Screw (10-32 Shoulder) 12,14,32
91547	Bracket 13,15,32
91548	Bushing 12,14,32

NUMERICAL INDEX (Continued)

Part Number	Description and Page Number
91550	Contact Operating Lever 12,14,32
91554	Universal Bar 6,31
91555	Contact Bracket 13,15
91556	Contact Lever 12,13,14,15
91558	Selector Lever Guide 12,14,32,33
91559	Feed Punch Selector Lever 12,14,32,33
91562	Screw (10-32 x 2-1/2) 9
91564	Armature 32
91565	Shim 4,6,31
91568	Contact Spring 9
91570	Punch Contact Assembly 13,15,32
91571	Counter Control Contacts Assembly 9,31
91573	Contact Spring 9
91574	Bracket 9
91575	Cover 9,31
91576	Cable - Perforator 30,31
91577	Spring 12,14,32
91621	Window 22
91624	Set of Parts 31
91625	Set of Parts Key Pressure Mechanism 32
91626	Set of Parts to Apply Two-Piece Armature Lever and Follow-Through Feature 32
91627	Set of Parts to Apply Space Mechanism with Centrally Located Key Lever 32
91631	Set of Parts to Apply Long Spacer Bar to Perforator Transmitter Equipped with Space Mechanism Having Centrally Located Spacer Key Lever 33
91727	Name Plate 1
91733	Filter Bracket 10
91734	Filter Bracket 10
91751	Copyholder 26
91752	Copyholder Assembly 26
92164	Name Plate 33
92165	Name Plate 33
92167	Set of Parts for Converting Bell System Keytop Arrangement "C" to "B" (For Use on 15-E Perforator Transmitter) 33
92168	Set of Parts for Converting Bell System Keytop Arrangement "C" to "A" 33
92170	Filter Bracket 7,10
92177**	Shield 20
92204	Cable Clamp 20,36
92216	Filter Assembly 10
92222	Filter Unit Assembly 10
92224	Filter Unit Assembly 10
92225	Filter Unit Assembly 10
92231	Set of Keytops 33
92243	Filter Assembly 10
92291	Capacitor 10
92505	Shielding Tube 10
92511	Roller 7
92521**	Counter Casting 20
92522**	Counter Cover 20
92534	Line Test Key 1,2
92631	Bushing 16
92744	Terminal 10
92828	Set of Parts to Apply Adjustable Feed Punch Selector Lever and Selector Lever Guide 33
92996	Electric Impulse Counter Assembly 34
93112	Screw (4-40 x 7/8) 39
93141	Screw (6-40 x 7/32) 10
93743**	Lid-Front 24
94086	Spacing Rod Bracket 7,34,36
94087	Extension 7,34,36
94088	Spacing Rod 7,34,36
94248	Cable Clamp 1,3,4,36
94249	Cable Clamp 4
94494	Set of Parts to Reduce Friction of the Repeat Space Rod Cut-Out 34
94617	Copyholder Spacer 26,27
95936	Choke Coil 10
95960	Tape Gauge 18
96281Y	Wire 10
96871	Detent Lever 12,14
96872	Roller 12,14
96883	Terminal 1
97393	Screw (6-40 Shoulder) 37
98841	Perforator Bracket 13,14,15
98869	Spacer 39
97631	Adjusting Bracket 14,35,36
97632	Bracket 14,34,35
97633	Feed Pawl Lever 14,35
97634	Feed Pawl 14,35,36
97635	Armature Lever 15,34,35
97636	Tape Stripper Plate 14
97637	Eccentric 14,35,36
97638	Guide 14,35,36
97639	Spring Post 14,34,35
97640	Spring Post 14,35,36
97641	Armature 12,13,14,15,34,35
97642	Bumper - Leather 18,35,36
97643	Backspacer Lever 14,35,36
98722	Screw (4-40 x 5/8) 35
98832	Screw (4-40 x 11/16) 8
98841	Perforator Bracket 13,14,15
99037	Set of Parts 34
99871	Counter Bracket 20,36
99872	Lamp Bracket 20,35
99873	Cover 35
99876	Backspacer 23
99878	Clamp Bushing 20,36
99879	Set of Parts 35
99880	Set of Parts 35
99881	Cable - Perforator and Counter 30,36
99882	Channel - Rubber 23,35
99947	Tool 18
99985	Tape Stripper Plate 14,35,36
99987	Retaining Bracket 14,35,36
99988	Link Extension - Upper 14,36,37
99989	Link Extension - Lower 14,36,37
100106	Screw (4-40 Shoulder) 37
100326	Screw (6-40 x 9/32) 5
100419	Stiffener 38
101275	Copyholder Assembly 26
101276	Copyholder Assembly 26
101456	Screw (6-32 x 9/32) 1
101476	Strip - Felt 22,23
101492**	Tape Reel Bracket 22
101592	Set of Keytops 36
101868	Copyholder Assembly 26
101879	Name Plate 22
101884	Name Plate 22
102009	Name Plate Assembly 22
102047	Screw (6-32 x 3/4) 26

NUMERICAL INDEX (Continued)

Part Number	Description and Page Number
102048	Screw (4-36 x 1/2) 26
102127	Screw (2-56 x 3/16) 22
102236	Screw (2-56 x 1/4) 22
102244	Name Plate 37
102245	Name Plate 37
102246	Name Plate 37
102446	Copyholder Assembly 26
102721**	Form Shelf 22
102763	Screw - Black Nickel 26
102883	Punch Contact and Latch Assembly 6,37
102884	Contact Bracket 16
102885	Latch Bracket 16
102886	Latch Lever 16
102887	Bracket 16
102888	Anti-Chatter Lever 16
102889	Screw (4-40 Special) 16
102890	Armature 16,37
102892	Screw (6-40 x 13/32) 16,37
102893	Spring Plate 16,37
102894	Spring Plate 16,37
102895	Operating Lever 14,16,37
102896	Set of Parts 37
102897	Stiffener 16
103386	Terminal Guard 19,36
103511	Screw (6-40 Shoulder) 16,35
103531	Insulator 16,35
103551	Set of Parts 16
104572	Stop Bracket 24
104691	Contact Assembly 39
104692	Arm 39
104693	Lock Loop 39
104694	Cable Assembly 39
104695	Bracket 39
104749	Blocking Plate 7
104807	Washer 19
104828	Screw (4-40 x 15/64) 20,24
104857	Bracket 27
104858	Plate 27
104859	Post 27
104860	Post 27
104861	Washer - Cup 27
104863	Nut - Wing 27
104865**	Perforator and Counter Unit Cover 23,24
104867	Clamp 23,24
104868	Glass 23,24
104936	Keyboard Cable 30
104990	Glass 24
105021	Copyholder 26
105024	Pad - Felt 23,24
105026	Copyholder 26
105244	Bracket 27
105912	Cock Washer 20
105940	Contact Stiffiner 38
106938	Set of Parts 2
106994	Set of Parts for Converting 89974 Cam Pulsing Contacts from Old Style to New Style Assembly 8
106995	Set of Parts for Converting 89974 Cam Pulsing Contacts from Old Style to New Style Assembly 8
107112	Shim 7
107303**	Range Finder Door 24
107485	Screw (6-40 Eccentric) 7
109152	Screw (4-40 x 11/64) 37
109889	Screw (3-56 x 1/4) 2
110434	Screw (4-40 x 3/16) 13,15,18
110435	Nut 7,9,19,21,24,31,37
110437	Spring 11,16,37
110682	Feed Roll 13,15
110683	Feed Roll 13,15
110730	Guide Plate 17
110733	Punch Block 17
110753	Screw (4-40 Special) 9
110901	Retractor Plate 17
110920	Guide Rod 27
110921	Guide Rod 28
110974	Spring 13,15
111017	Screw (6-40 x 5/16) 23
111020	Punch Block 17
111022	Punch Block 17
111262	Bracket 2
111329	Line Guide 27
111731	Cam Sleeve Assembly 37
111970	Cam Key 2
112008	Set of Parts 37
112009	Bracket 37
112010	Bracket 38
112011	Extension 37,38
112012	Keylever Assembly 37,38
112013	Bracket 38
112069	Cable 37
112105	Guard 37
112106	Spacer 37
112108	Bracket 37
112111	Contact Spring Assembly 38
112112	Contact Spring Assembly 38
112116	Lever 37
112117	Lever 38
112118	Plate 38
112127	Cam Follower Hinge 8,38
112128	Cam Follower Retainer 8,38
112129	Cam Follower 38
112498	Screw (6-40 x 3/4) 38
112503	Contact Assembly 38
112504	Contact Assembly 38
112505	Contact Spring Assembly 38
112549	Set of Parts 2
112570	Set of Parts 38
112571	Contact Spring 38
112572	Contact Spring - With Points 38
112578	Backstop Plate 38
112588	Contact Mounting Assembly 38
112595	Set of Parts 38
112626	Nut 9,22,25,27
112627	Nut 22
112634	Spring 7
112644	Punch Block 17
112646	Punch Block 17
112670	Line Test Key 2
114240**	Copyholder Plate 27
114749	Cable 2
115700**	Copyholder Assembly 27
115709**	Copyholder Assembly 28
115723**	Form Accumulating Shelf Assembly 22
115726**	Tape Reel and Container Assembly 25
115763**	Perforator Unit Cover Assembly 23

NUMERICAL INDEX (Continued)

Part Number	Description and Page Number
115939	Journal 12,14
117079**	Glass Rail - Right 22
117080**	Glass Rail - Left 22
117370	Cover Handle 24
117406	Contact Spring 11,13,15,16
117407	Contact Spring 11,13,15,16
117447**	Retaining Plate 1
117715**	Keyboard Base 1,4
117750**	Perforator and Counter Unit Cover Assembly 23
117907**	Shield 22
117931**	Bracket 22
118485**	Cover Plate 22,24
118526**	Counter Cover Assembly 20
118905	Spring 16
119639**	Plug Button 24
120451	Name Plate 28
120498	Retainer Card 24
120594	Cam Follower - Rear 8
120595	Cam Follower - Front 8
120882	Contact Spring 11
121244	Cable Clamp 12,13,15
121995	Tape Tension Lever 13,15
122264	Set of Parts 38
122265	Nut 39
122266	Repeat Lever 38
122267	Repeat Lever Bracket 38
122268	Repeat Lever Extension 38
122269	Repeat Space Extension 39
123594	Spring 39
123955	Screw (4-40 Shoulder) 19
124975	Back Spacer 23
125011	Washer 3,9,12,13,14,15,19,20,24,31, 32,34,35,36
125012	Lamp Socket 34
125015	Washer 16,22
125112	Screw (2-56 x 1/8) 5
125124	Screw (4-40 Shoulder) 19,21,37
125126	Screw (2-56 x 9/32) 13,15
125137	Screw (10-32 x 1/2) 3
125139	Screw (4-40 x 1/8) 7,10,34,36
125143	Screw - Nickel 26,28
125168	Screw (6-40 x 1/4) 5
125176	Screw (3-56 Pilot) 19
125211	Screw 4,13,15
125215	Screw (4-40 x 3/16) 14,36,37
125229	Nut 1,23,25
125235	Nut 23,24,26,27
125262	Spring 17
125404	Lamp - Red - 110V 20,34
125418	Spring Post 12
125420	Shedder Guide 17
125421	Dowel 17
125422	Dowel 17
125493	Code Punch - Large 17
125683	Eccentric 12,14
125949	Screw (0-80 x 1/8) 19
126775	Nut 20
126776	Lamp Socket 20
136092**	Copyholder Assembly 27
136128	Set of Parts 39
136141	Set of Parts 39
138803**	Copyholder 27
139760	Spacing Block 39
139762	Tape Tension Spring 39
139763**	Front Plate 39
139764**	Tape Container 39
151618	Screw (6-40 x 7/16) 13,15
151637	Screw (4-40 x 1/4) 39
151657	Screw (6-40 x 1/4) 39
151688	Screw (4-40 x 5/8) 15